Honey Brook Township

Subdivision and Land Development Ordinance #109-2004

September 8, 2004

ARTICLE I: GENERAL PROVISIONS 1
101. Short Title and Effective Date. 1
102. Purposes. 1
103. Authority 2
104. Interpretation 2
105. Severability 2
106. Scope and Jurisdiction 2
107. Municipal liability 3
108. Repealer 3
ARTICLE II: DEFINITIONS 5
201. General Interpretation 5
202. Definitions of Specific Terms 5
ARTICLE III: SUBDIVISION AND LAND DEVELOPMENT CONTROL 19
Section 301. Extent of Control 19
ARTICLE IV: PROCEDURE 21
Section 401. Municipal Review 21
Section 402. Major and Minor Applications 21
Section 403. Submission of Sketch Plan 22
Section 404. Review of Sketch Plan 22
Section 405. Submission of Preliminary Plan 23
Section 406. Review of Preliminary Plan 24
Section 407. Submission of Final Plan 25
Section 408. Review of Final Plan 26
Section 409. Subdivision and Land Development Agreements 28
Section 410. Performance Guarantees 29
Section 411. Recording of Final Plan 30
Section 412. Commencement of Development 31
Section 413. Time Limitation of Plans 32
Section 414. Plan Amendments 32
ARTICLE V: PLAN CONTENT REQUIREMENTS 33
Section 501. Sketch Plan 33
Section 502. Preliminary Plan 33
Section 503. Final Plan 39
ARTICLE VI: DESIGN STANDARDS 43
Section 601. Application 43
Section 602. Land Requirements 43
Section 603. Blocks 43
Section 604. Lots and Lot Sizes 44
Section 605. Street System 45
Section 606. Cul-de-sac and Other Single-access Streets 47
Section 607. Street Width 49
Section 608. Street Alignment 49
Section 609. Street Grades 50
Section 610. Street Intersections 50
Section 611. Acceleration, Deceleration and Turning Lanes 53
Section 612. Traffic Impact Study 54
Section 613. Street Construction 54
Section 614. Private Streets 57
Section 615. Driveways 57

Section 616. Alleys and Service Streets 61
Section 617. Parking Areas 62
Section 618. Sidewalks and Paths 64
Section 619. Curbs 65
Section 620. Street Lights 67
Section 621. Monuments 68
Section 622. Sewage Treatment and Disposal 69
Section 623. Water Supply 71
Section 624. Other Utilities 73
Section 625. Recreational and Open Space Land 74
Section 626. Easements, Rights-of-way, Reserve Strips 81
Section 627. Stormwater Management 82
Section 628. Natural Features Conservation 90
Section 629. Landscaping 93
ARTICLE VII: MOBILE HOME PARKS 105
Section 701. Definitions 105
Section 702. Application Procedure 105
Section 703. Density, Dimensional, and General Layout Standards 106
Section 704. Street System 106
Section 705. Off-street Parking Areas and Walks 107
Section 706. Stormwater Management 107
Section 707. Water Supply 107
Section 708. Sewage Treatment and Disposal 108
Section 709. Utility Distribution System 108
Section 710. Common Open Space Areas 108
Section 711. Buffering, Screening, and Landscapes 108
Section 712. Service Buildings and Facilities 108
Section 713. Fuel Supply and Storage 109
Section 714. Electrical Distribution System 110
Section 715. Fire Protection 110
Section 716. Solid Waste Collection and Disposal 111
Section 717. Miscellaneous Structural Requirements 111
Section 718. Permits, Licenses and Inspections 112
ARTICLE VIII: CONSTRUCTION AND ACCEPTANCE OF IMPROVEMENTS 113
Section 801. Construction Required 113
Section 802. Inspections 113
Section 803. Release from Performance Guarantee 114
Section 804. As-built Plans 115
ARTICLE IX: ADMINISTRATION 117
Section 901. Relief from Unnecessary Hardship 117
Section 902. Records 117
Section 903. Fees and Costs 117
Section 904. Enforcement 118
Section 905. Penalties 118
Section 906. Appeals 119
Section 907. Revision and Amendment 119

ARTICLE I: GENERAL PROVISIONS

101. Short Title and Effective Date.

This Ordinance shall be known and may be cited as "The Honey Brook Township Subdivision and Land Development Ordinance." The Ordinance number is 109-2004. This Ordinance shall take effect as provided for by law.

102. Purposes.

The purposes of this Ordinance are:

A. To assure sites are suitable for building purposes and human habitation.

B. To assist orderly, efficient, integrated, and harmonious development of the Township.

C. To coordinate proposed streets with existing streets or other proposed streets of the Township, and to assure compatibility of such streets that may be situated in both municipalities.

D. To provide adequate open spaces for traffic, recreation, light, and air and for the proper distribution of population.

E. To assure adequate and coordinated stormwater management, water supply, wastewater management, and other appropriate utility services.

F. To fulfill the purposes of Article I, Section 27 (the Environmental Amendment) of the Pennsylvania Constitution, which reads: "The people have a right to clean air, pure water, and to the preservation of the natural, scenic, historic and aesthetic values of the environment. Pennsylvania's natural resources are the common property of all the people, including generations yet to come. As trustees of these resources, the Commonwealth shall conserve and maintain them for the benefit of all the people."

G. To ensure the development of land will be conducted with due regard to topography and geologic conditions, so that the highest quality environment is obtained.

H. To regulate the subdivision and/or development of land within any designated flood plain district in order to promote the general health, welfare, and safety of the community.

I. To require that each subdivision lot in flood-prone areas include a safe building site with adequate access; and, that public facilities which serve such uses be designed and installed to minimize flood damage.

J. To establish standards and criteria governing the design, construction, alteration, extension, and maintenance of mobile home parks and recreational vehicle parks.

K. To secure equitable handling of all subdivision and land development plans by providing uniform procedures and standards within the Township.

L. To protect and conserve the value of land and buildings in the Township.

M. To create conditions favorable to the health, safety, and general welfare of the citizens of the Township.

103. Authority

This Ordinance has been prepared under the authority and is consistent with the terms and requirements of the Pennsylvania Municipalities Planning Code (53 P.S. §10101 et seq., Act 1988-170, as amended) and is in accordance with the police power authority granted to the Township under the Second Class Township Code. It is intended to further the objectives of Article I, Section 27 of the Constitution of the Commonwealth of Pennsylvania, and of the Honey Brook Joint Comprehensive Plan.

104. Interpretation

The provisions of this Ordinance shall be held to be minimum requirements to meet the above stated purposes. Where the provisions of this Ordinance impose greater restrictions than those of any statute, other Ordinance, or regulation, the provisions of this Ordinance shall prevail. Where the provisions of any statute, other Ordinance, or regulation impose greater restrictions than those of this Ordinance, the provision of such statute, Ordinance, or regulation shall prevail.

105. Severability

The provisions of this Ordinance shall be severable, and if any of its provisions shall be held to be unconstitutional, illegal, or invalid, such decision shall not affect the validity of any of the remaining provisions of this Ordinance. It is hereby declared as a legislative intent that this Ordinance would have been adopted had such unconstitutional, illegal, or invalid provision not been included herein.

106. Scope and Jurisdiction

A. From and after the effective date hereof, the Honey Brook Township Board of Supervisors shall have the authority to regulate subdivision and land development within Honey Brook Township.

B. The Board of Supervisors shall have the jurisdiction of subdivision and land development within the Township limits. In order to aid the Board in their considerations of subdivision and land development applications, the Board hereby decrees that the Planning Commission of Honey Brook Township shall serve the following functions:

1. All plans, whether major or minor, upon submission to the duly-authorized representative of the Township, shall be referred to the Planning Commission for review.
2. The Planning Commission shall make recommendations to the Board concerning approval, disapproval, modification, and/or conditions for approval of such plans.

3. The Planning Commission shall make recommendations to the Board concerning the interpretation of the granting of requested modifications to provisions and standards of this Ordinance.

107. Municipal liability

The grant of a permit or approval of a plan for any proposed subdivision and/or land development to be located within any identified Flood Plain area or District shall not constitute a representation, guarantee, or warranty of any kind by the Township or by any official or employee thereof of the practicability or safety of the proposed use, and shall create no liability upon the Township, or upon its officials or employees.

108. Repealer

All Ordinances and parts of Ordinances inconsistent herewith are hereby repealed to the extent that such Ordinances or parts of Ordinances are inconsistent herewith. The Subdivision and Land Development Ordinance of June 14, 1995 and Ordinance #101-2002 are specifically repealed.

ENACTED AND ORDAINED this 8th day of September 2004.

ATTEST:

HONEY BROOK TOWNSHIP
BOARD OF SUPERVISORS

_____
Secretary

_____
D. Weston Darby, Jr., Chairman

_____
Gregory M. Cary, Vice-Chairman

_____
Donald E. Johnson, Member

ARTICLE II: DEFINITIONS

201. General Interpretation

Unless otherwise expressly stated, the words and phrases listed in this Article shall be construed throughout this Ordinance to have the meanings indicated herein. Words in the singular include the plural, and those in the plural include the singular. Words in the present tense include the future tense. Words used in the masculine gender include the feminine and neuter. The word "person" includes corporation, unincorporated association, firm, organization, and partnership, as well as an individual. The word "structure" includes the meaning of "building," and each shall be construed as if followed by the phrase "or part thereof." The word "may" is permissive; the word "shall" or "must" always is mandatory. When words, phrases, or terms are not defined, they shall have their ordinarily accepted meanings or such as the context shall imply.

202. Definitions of Specific Terms

The following terms, as used in this Ordinance, shall have the meanings indicated below:

AGRICULTURE – The tilling of the soil; the keeping or raising of livestock, horses, or poultry; a nursery; landscape operations; and tree farms.

ALLEY – [see: SERVICE STREET]

APPLICANT – A landowner or developer, including his heirs, successors, and assigns, who has filed an application for subdivision or land development.

APPLICATION FOR DEVELOPMENT – Every application, whether preliminary or final, required to be filed and approved prior to start of construction or development, including but not limited to an application for a building permit, for the approval of a subdivision plan, for the approval of a land development plan, and for the approval of a planned residential development.

AUTHORITY – A body politic and corporate created pursuant to the act of May 2, 1945 (P.L. 382, No. 164), known as the "Municipality Authorities Act of 1945."

BLOCK – A tract of land bounded entirely by streets; by streets and a watercourse; by streets and a railroad; by streets and the corporate boundaries of the Township; by streets and public land or other park or recreation area; or any combination of the above.

BOARD – The Board of Supervisors of Honey Brook Township.

BOROUGH – The Borough of Honey Brook.

BUILDER – A person, who is not necessarily the owner of the land or agent of the same, who by contract or other agreement is charged with the responsibility of construction of buildings or other structures, or of making any construction improvements on any parcel of land.

BUILDING – Any structure for which a building permit is required by the Township, i.e., any combination of materials forming any structure which is erected on the ground and designed, intended, or arranged for the housing, sheltering, enclosure, or structural support of persons, animals, or property of any kind. Any mobile home or similar structure constructed off-site prior to placement on the ground also is a building.

BUILDING COVERAGE – The relation or ratio of the total ground floor area of all buildings on a lot to the total area of the lot on which they are located.

BUILDING SETBACK LINE – An established line within a property defining the minimum required distance between any building to be erected and the adjacent right-of-way line of the street on which it fronts, to provide the minimum front yard dimension specified by the Township Zoning Ordinance. [see also: LOT LINE, FRONT]

BUFFER – A strip of required yard space adjacent to a use or facility within a property, or to the boundary of a property or district, on which is located a visual barrier of sufficient height and density to appropriately buffer or screen the property or use.

CAMPING PARK – A parcel of land used by campers where only temporary shelters, as tent and camping trailers, are in use throughout various seasons of the year.

CARTWAY – The portion of a street right-of-way, paved or unpaved, customarily used by vehicles in the regular course of travel over the street.

CLEAR SIGHT TRIANGLE – An area of unobstructed vision at street intersections defined by lines of sight between points at a given distance from the intersection of the street center lines.

COMPREHENSIVE PLAN – The official public document of current adoption consisting of maps, charts, and textual matter, that constitutes a policy guide to decisions about the physical and social development of the Township, titled *Honey Brook Joint Comprehensive Plan* (February 1993), and its authorized successors.

CONDOMINIUM – A form of ownership of real property, as defined in the Pennsylvania Uniform Condominium Act of 1980, which includes an undivided interest in a portion of a parcel, together with a separate interest in a space within a structure.

CROSSWALK – A right-of-way, municipally or privately owned, intended to furnish access for pedestrians.

DBH – The diameter of a tree at breast height, usually measured 3.5 feet from the ground surface.

DENSITY – [as defined in the Township Zoning Ordinance, as applicable]

DETENTION BASIN – A structure designed to retard surface water runoff for a period of time sufficient to causer the deposition of sediment and to reduce the velocity and/or volume of surface flows leaving a site, thus preventing further erosion.

DEVELOPER – Any landowner, agent of such landowner, or tenant with the permission of such landowner, who makes or causes to be made the improvements associated with a subdivision or land development. The developer may also be the subdivider as defined herein.

DEVELOPMENT – Any man-made change to improved or unimproved real estate, including but not limited to buildings or other structures, the placement of mobile homes, streets and other paving, utilities, mining, dredging, filling, grading, excavation drilling operation, the storage of equipment or materials, and the subdivision of land.

DEVELOPMENT AGREEMENT – A written contract between a subdivider or developer and the landowner, on one hand, and the Township on the other, specifying the conditions of final approval by the Township, and providing for the completion and dedication of critical improvements.

DRAINAGE AREA – The upstream watershed area of a drainage basin measured from a point of discharge in the watercourse.

DRAINAGE FACILITY – Any ditch, gutter, pipe, culvert, stormwater or other structure designed, intended, or constructed for the purpose of diverting surface waters from or carrying surface waters off streets, public rights-of-way, parks, recreational areas, or any part of any subdivision or land development or contiguous land areas.

DRIVEWAY – A private means of vehicular and pedestrian access from a public or private street to a single lot.

DRIVEWAY, COMMON – A driveway providing access to not more than two contiguous lots, which is established and maintained in accordance with the applicable requirements of this Ordinance, the Township Zoning Ordinance, and all other applicable laws and regulations.

DWELLING – Any building or part thereof designated for or occupied principally for permitted residential uses. [see also Township Zoning Ordinance, as applicable]

EARTHMOVING ACTIVITY – Activity resulting in the movement of earth or stripping of vegetative cover from the earth.

EARTH DISTURBANCE, REGULATED – Earth disturbance activity of one acre or more.

EASEMENT – A permanent right granted for limited use of private land, typically for a public purpose. The owner of the property shall have the right to make any other use of the land which is not inconsistent with the rights of the grantee. (e.g., utility, drainage, and public access easements).

EASEMENT, CONSERVATION – A legal agreement between a property owner and an appropriate conservation organization or governmental entity, through which the property owner establishes certain use restrictions over all or portion(s) of the property for conservation purposes.

ENGINEER – A professional engineer, licensed in Pennsylvania, and duly designated by the Township to perform the duties of engineer as herein specified.

EROSION – The removal of surface materials by the action of natural elements.

EROSION, ACCELERATED– The removal of the surface of the land through the combined action of man's activities and natural processes at a rate greater than would occur from natural processes alone.

EXCAVATION – Any act by which earth, sand, gravel, rock, or any other similar material is dug into, cut quarried, uncovered, removed, displaced, relocated, or moved, including the conditions resulting therefrom.

FENCE – Any freestanding and uninhabited structure consisting of wood, glass, metal, plastic, wire, wire mesh, masonry, or vegetation, singly or in combination with other materials, two feet or higher, erected to: secure or divide one property from another or part of a property from a remaining part; to ensure privacy; to protect the property so defined; and/or to enclose all or part of the property.

FILL – (i) Any act by which earth, sand, gravel, rock, or any other similar material is placed, pushed, dumped, pulled, transported, or moved to a new location above the natural surface of the ground or on top of the stripped surface, including the conditions resulting therefrom; (ii) the difference in elevation between a point on the original ground and designated point of higher elevation on the final grade; (iii) the material used to make a fill.

FLAG LOT – [see: LOT, INTERIOR]

FLOOD PLAIN – The low areas adjoining and including a watercourse or other body of water (such as a pond, marsh, or lake) within the Township, which are subject to inundation by a flood having a frequency of recurrence of one in one hundred years. The basis for delineation shall be prescribed in the Township Zoning Ordinance.

GUARANTEE, MAINTENANCE – Any security which may be required of a developer by the Township, after final acceptance by the Township of improvements installed by the developer. Such security may include, but is not limited to, Federal or Commonwealth lending institution irrevocable letter of credit or restrictive or escrow account.

GUARANTEE, IMPROVEMENTS PERFORMANCE – Any security which may be required of a developer by the Township in lieu of a requirement that certain improvements be made before the Township approves the developer's subdivision plan or land development plan. Such

security may include, but is not limited to, those instruments cited above as acceptable for maintenance guarantees.

IMPERVIOUS SURFACE – Material which is impenetrable and unable to absorb water, including but not limited to buildings, structures, and paved areas (driveways, parking lots, etc.).

IMPROVEMENTS – Buildings, for public or quasi-public use, streets, curbs, gutters, street lights and signs, water mains, hydrants, sanitary sewer mains including laterals to the street right-of-way line, storm drainage lines, stormwater management structures, walkways, recreational facilities, open space improvements, shade trees, buffer or screen plantings, and all other additions to the tract that are required by Ordinance or necessary to result in a complete subdivision or land development in the fullest sense of the term.

IMPROVEMENTS, PUBLIC – Improvements, including but not limited to those contained in the definition of "Improvements," that are intended for dedication to the Township, either in fee or by easement.

LAND DEVELOPMENT – Any of the following activities:

(i) The improvement of one lot or two or more contiguous lots, tracts, or parcels of land for any purpose involving:

(a) A group of two or more residential or nonresidential buildings, whether proposed initially or cumulatively, or a single nonresidential building on a lot or lots regardless of the number of occupants or tenure; or

(b) The division or allocation of land or space, whether initially or cumulatively, between or among two or more existing or prospective occupants by means of, or for the purpose of streets, common area, leaseholds, condominiums, building groups or other features.

(ii) A subdivision of land.

(iii) Development in accordance with §503(1.1)(i) and (iii) of the Municipalities Planning Code. The addition of an accessory building, including farm buildings, on a lot or lots subordinate to an existing principal building shall not be considered a land development for purposes of this Ordinance.

LAND DISTURBANCE – Any activity which causes land to be exposed to the danger of erosion, including clearing, grading, filling, plowing, or any other earthmoving, as defined.

LANDOWNER – The legal or beneficial owner or owners of land, including for purposes of this Ordinance the holder of an option or contract to purchase (whether or not such option or contract is subject to any condition), a lessee if he is authorized under the lease to exercise the rights of the landowner, or other person having a proprietary interest in land.

LANE, ACCELERATION OR DECELERATION – A lane of a cartway intended for use by vehicles entering, leaving, or crossing a lane of forward travel without interrupting the flow of traffic.

LOT – A parcel of land, undivided by any street or dedicated future street right-of-way. Such parcel shall be separately described by metes and bounds, the description of which is recorded in the office of the Recorder of Deeds of Chester County by deed description or is described by an approved subdivision plan recorded in the office of the Recorder of Deeds of Chester County.

LOT AREA – The nominal acreage contained within the property lines of a lot as described in the deed. Acreage shall be determined from an actual site survey rather than from a deed description. Areas to be excluded from the calculation of minimum lot area shall be as stipulated in the Township Zoning Ordinance.

LOT, CORNER – A lot at the junction of an abutting two or more intersecting streets where the interior angle of intersection does not exceed 135 degrees. A lot abutting a curved street shall be deemed a corner lot if the tangents to the curve at the points of intersection of the side lot lines with the street lines intersect at an interior angle of less than 135 degrees. Each yard abutting a street shall be considered a front yard. Other yards within a corner lot shall be determined by the Township Zoning Ordinance.

LOT COVERAGE – The total area of the lot or parcel which is covered by buildings, driveways, paved surfaces, and other impervious surfaces.

LOT, INTERIOR (FLAG) – A lot which does not adjoin a street but is connected thereto by an access strip of required minimum width. Minimum lot area and other dimensional requirements shall be those of the applicable zoning district, and shall be met on that portion of the lot exclusive of the access strip. The access strip must be a fee simple portion of the lot, but may not be counted a part of the minimum lot area required be applicable zoning provisions.

LOT LINE, FRONT – The lot line abutting any street and coinciding with any street right-of-way line. In the case of any corner lot, each of the two (or more) street-abutting lot lines shall be considered a front lot line. In the case of an interior lot, the front line shall be the line most parallel and closest to the street right-of-way line at the nearest point to the right-of-way where the lot attains substantially the minimum required lot width.

LOT LINE, REAR – A lot line opposite and most distant from the front lot line. If the rear lot line is less than 10 feet in length, or if the lot forms a point at the rear, the rear lot line shall be deemed to be a line 10 feet in length within the lot, parallel to and at the maximum distance from the front lot line. In the case of a corner lot, the rear lot line shall be any lot line that is not a front lot line or a side lot line.

LOT, REVERSE FRONTAGE – A lot extending between and having frontage on an arterial or collector street and a local street, with vehicular access solely from the latter.

LOT WIDTH – The horizontal distance between side lot lines measured along the street line or building setback line, as specified by the Township Zoning Ordinance. When the street line is curved, the measurement shall be made on the arc, on or parallel to the curve of the street line.

MANUFACTURED HOME – [for purposes of the National Flood Insurance Program only; see: MOBILE HOME]

MANUFACTURED HOME LOT – [for purposes of the National Flood Insurance Program only; see: MOBILE HOME LOT]

MANUFACTURED HOME PARK OR SUBDIVISION – [for purposes of the National Flood Insurance Program only; see: MOBILE HOME PARK]

MINIMIZE – To reduce to the smallest amount possible. "Minimize" shall not mean complete elimination but shall require that the most substantial efforts possible under the circumstances have been taken to reduce the adverse effect of the action required to be minimized. With respect to activities, the conduct of which is adverse to the conservation of natural features of land, the requirement to "minimize" shall include but not be limited to the requirement that the placement of dwellings and other structures and the location of roads, sedimentation and erosion control devices, and earthmoving activities shall be planned and designed so as to permit the adverse effect of the activity in question to be reduced to the smallest amount possible under the circumstances, consistent with the otherwise permitted development.

MOBILE HOME – A transportable, single-family dwelling intended for permanent occupancy contained in one unit, or in two or more units designed to be joined into one integral unit capable of again being separated for repeated towing, which arrives at a site complete and ready for occupancy except for minor and incidental unpacking and assembly operations, and constructed so that it may be used without a permanent foundation, including any addition or accessory structure, such as porches, sheds, decks, or additional rooms. All mobile homes shall meet construction standards set by the U.S. Dept. of Housing and Urban Development.

MOBILE HOME LOT – A parcel of land in a mobile home park, improved with the necessary utility connections and other appurtenances necessary for the erection thereon of a single mobile home.

MOBILE HOME PARK – A parcel or contiguous parcels of land under single ownership which has been planned and improved for the placement of mobile homes for nontransient use, consisting of two or more mobile home lots.

MONUMENT – A tapered, permanent survey reference point of stone or concrete having a rounded top of four inches on each side, a bottom of six inches on each side, and a length of 24 inches.

MUNICIPALITIES PLANNING CODE – The Pennsylvania Municipalities Planning Code, Act 247 of 1968, s amended and reenacted by Act 170 of 1988. 53 P.S. 10101, et seq, and any subsequent amendments thereto.

ONE HUNDRED-YEAR FLOOD – A flood that, on average, is likely to occur once every 100 years (i.e., that has a 1% chance of occurring each year, although the flood could occur in any year).

OPEN SPACE, COMMON – A parcel or parcels of land or an area of water, or a combination of land and water, within a development and designed and intended for the use or enjoyment of residents of the development, not including streets, off-street parking areas, areas set aside for public facilities, and private yards.

PLAN –

A. As Built: A corrected final plan, showing dimensions and locations of all streets and other improvements as actually constructed.

B. Conservation: A plan to accompany preliminary and final plan submissions, including a natural resources inventory, impact assessment, and mitigation and maintenance proposals.

C. Final: An exact and complete site design and layout plan and improvements construction plan prepared by a registered engineer or surveyor, to be recorded upon approval.

D. Improvements Construction: A component of the preliminary and final plan, prepared by a registered engineer, showing the construction details of streets, drains, sewers, water supply systems, bridges, culverts, and other improvements as required, including a horizontal plan, profiles, and cross-sections.

E. Land Development: A sketch, preliminary, or final plan, including written and graphic material, showing the provision for development of a subject tract when a subdivision plan would not be applicable.

F. Preliminary: A site design and layout plan and improvements construction plan prepared by a registered engineer, in less detail than a final plan and prepared for consideration prior to submission of a final plan.

G. Recorded: A final plan, with accompanying documents as required by this Ordinance, which has been recorded by the applicant in the office of the Recorder of Deeds of Chester County.

H. Site Design and Layout: A component of the preliminary and final plan, prepared by a registered engineer, showing: property lines, existing and proposed streets, lots, buildings, public areas, drainage facilities, easements, and other details pertinent to the proposal.

I. Sketch: A plan submitted, at the applicant's option, for review and discussion prior to application for preliminary plan approval, including at minimum the information suggested for sketch plans by this Ordinance.

PLANNING COMMISSION – The Planning Commission of the Township of Honey Brook.

PUBLIC NOTICE – Notice given in advance of any public hearing required by this Ordinance. Such notice shall be published once each week for two successive weeks in a newspaper of general circulation in the Honey Brook community, and shall state the time and place of any hearing required by this Ordinance and the particular nature of the matter to be considered at the hearing. The first publication shall not be more than thirty (30) days and the second publication shall not be less than seven (7) days from the date of the hearing.

REREATIONAL VEHICLE – A vehicle which is: (i) built on a single chassis; (ii) not more than 400 square feet, measured at the largest horizontal projections; (iii) designed to be self-propelled or permanently towable by a light-duty truck; (iv) not designed for use as a permanent dwelling but as temporary living quarters for recreational, camping, travel, or seasonal use.

RECREATIONAL VEHICLE PARK – A parcel of land under single ownership, which has been planned and improved for the placement of two or more recreational vehicles.

RESERVE STRIP – A parcel of land separating a street from adjacent properties.

RESUBDIVISION – A change in map of an approved or recorded subdivision plat, if such change affects any street layout on such map or area reserved thereon for public use, or any lot line; or if it affects any map or plan legally recorded prior to the adoption of any regulations controlling subdivisions.

RETENTION BASIN – A reservoir, formed from soil or other material, which is designed to detain temporarily a certain amount of stormwater from a catchment area and which also may be designed to permanently retain additional stormwater runoff from the catchment area. Retention basins also may receive fresh water from year-round streams. Unlike detention basins, retention basins always contain water, and thus may be considered man-made lakes or ponds.

RIGHT-OF-WAY – The total width of any land reserved or dedicated as a street, alley, or crosswalk, or for any other public or private purpose.

RUNOFF – The surface water discharge or rater of discharge of a given watershed after a fall of rain or snow that does not enter the soil but runs off the surface of the land.

SEASONALLY HIGH WATER TABLE SOILS – Those soils in which the groundwater surface is one foot or less from the ground surface at certain times of the year.

SEDIMENT – Solid material, both mineral and organic, that is in suspension, is being transported, or has been moved from its site of origin by wind, water, or gravity.

SEDIMENTATION – The process by which mineral or organic matter is accumulated or deposited by wind, water, or gravity.

SEWAGE FACILITIES –

A. Individual system: The disposal of sewage by use of cesspools, septic tanks, or other safe and healthful means, approved by the Chester County Health Department, and generally within the confines of the lot on which the use is located.

B. Community system: A sanitary sewage system, privately built and operated, in which sewage is carried from individual dischargers by a system of pipes to one or more common treatment and disposal facilities. Treatment and disposal may occur either on-site or off-site, and shall be reviewed by the Pennsylvania Department of Environmental Protection.

C. Public system: Any system designed and operated by the Northwestern Chester County Municipal Authority for the treatment and disposal of sewage in which sewage is conveyed by a system of pipes to an off-site, publicly-operated treatment facility and disposed of through means approved by the Pennsylvania Department of Environmental Protection.

SHADE TREE – A tree in a public place, street, special easement, or right-of-way adjoining a street, as provided in this Ordinance.

SIGHT DISTANCE – A line of unobstructed vision between two points of specified height above the centerline of a street, the length of which shall be of a minimum specified distance.

SPECIMEN TREE – A unique, rare, or otherwise specifically selected plant or tree which most typically represents a whole class or group, specifically in shape, form, historical importance, or any other characteristic which may be designated as such by the Township.

STORMWATER – Water which surfaces, flows, or collects during and subsequent to rain or snowfall.

STORMWATER MANAGEMENT DETENTION FACILITY(S)—Those facilities, including but not limited to detention/retention basins, detention/retention berms, infiltration/recharge pits and/or trenches, designed to regulate and control stormwater runoff rate, erosion and sedimentation.

STREET – A right-of-way intended for general public use to provide means of approach for vehicles and pedestrians. The word “street” includes the words “road,” “highway,” “thoroughfare,” and “way.” Streets are further categorized below, and are specifically identified in Chester County Planning Commission Technical Memo #1-2004, as amended from time to time.

A. Arterial: A street serving a large volume of comparatively high-speed and long distance traffic and providing a high degree of mobility, including all facilities classified as main and secondary highways by the Pennsylvania Department of Transportation.

B. Collector: A street designed and located to provide means to drain traffic off local streets and to provide access for through traffic between residential neighborhoods and districts within the Township to major streets and/or a street used for access to non-residential properties; i.e., commercial, industrial, professional, etc.

1. Major: A collector serving moderate levels of traffic, providing a mix of access and mobility, and linking neighborhoods.

2. Minor: A collector serving lower amounts of traffic, providing relatively more access than mobility, and serving as a major road through identifiable neighborhoods.

C. Cul-de-Sac Street: A local street intersecting another street at one end, and terminating at the other end by a permanent vehicular turnaround.

D. Local Street: A street intended to serve and provide access to the properties abutting thereon and not connecting with other streets in such a manner as to encourage through traffic.

E. Private Street: A local street, serving only abutting lots, that is not offered or required to be offered for dedication.

F. Service Street (Alley): A minor right-of-way, on which no principal use fronts, providing secondary vehicular access to the side or rear of two or more properties.

G. Single-Access Street: A local street, including but not limited to, a cul-de-sac or loop design, which has only one point of intersection with an existing street or with a proposed street having more than one access point.

STREET LINE – The dividing line between a lot and the outside boundary or right-of-way line of a public street, road, or highway legally open or officially platted, or between a lot and a privately owned street, road, or way over which the owners or tenants of two or more lots, each held in single and separate ownership, have the right-of-way.

STRUCTURE – Any man-made object having an ascertainable stationary location on land or water, whether or not affixed to the land. Anything constructed or erected on the ground or attached to the ground, including but not limited to buildings, sheds, mobile homes, and other similar items. A walled and roofed building, including a gas or liquid storage tank, that is principally above ground; a manufactured home.

SUBDIVIDER – Any individual, firm, partnership, association, corporation, estate, trust, or any other group or combination acting as a unit (or agent authorized thereby) which undertakes the subdivision or development of land.

SUBDIVISION – The division or redivision of a lot, tract, or parcel of land into two or more lots, tracts, parcels, or other divisions of land including changes in existing lot lines for the purpose, whether immediate or future, of lease, partition by the court for distribution to heirs or devisees, transfer of ownership, or building or lot development; provided however, that the subdivision by lease of land for agricultural purposes into parcels of more than ten acres, not involving any new street or easement of access or any residential dwelling, shall be exempted. Any subdivision of land for mortgage purposes shall comply with all of the requirements of this Ordinance and the Township Zoning Ordinance.

SUBDIVSION, MINOR – The division of a tract of land for limited single-family detached dwelling purposes, consistent with the terms of §402 of this Ordinance, in which site disturbance is minimized and applicable review procedures are streamlined.

SUBDIVISION OFFICER – That official of the Township designated by the Board to administer the provisions of this Ordinance.

SUBSTANTIALLY COMPLETED – A site condition where, in the judgment of the Township Engineer, at least 90% (based on the cost of the required improvements for which financial security was posted pursuant to §410 of this Ordinance) of those improvements required as a condition of final approval have been completed in accordance with the approved plan, so that the project will be able to be used, occupied, or operated for its intended purpose.

SURVEYOR – A professional land surveyor licensed in Pennsylvania.

TOPSOIL – Natural and friable loam containing sufficient humus and nutrients to support plant growth.

TOWNSHIP – The Township of Honey Brook.

WATERCOURSE – A permanent stream, intermittent stream, river, brook, creek, or a channel or ditch for water, whether natural or man-made.

WATER SUPPLY –

A. Individual system: A safe, healthful, and adequate supply of water to a single user from a private well located on the land of the user.

B. Central water supply system: A system providing water for human consumption from a common source or sources to all dwellings and other buildings within a development. Such system shall comply fully with all applicable requirements of the Pennsylvania Dept. of Environmental Protection and the Pennsylvania Public

Utility Commission. The water supply source may be located on-site and/or off-site. A central system can be further described by the following:

1. Public water system: A system which has at least 15 service connections or regularly serves an average of at least 25 individuals daily for at least 60 days per year. The term includes: (i) any collection, treatment, storage, and distribution facilities that are under control of the operator and used in connection with the system; (ii) collection or pretreatment storage facilities not under control of the operator but which are used in connection with the system; and (iii) a system which provides water for bottling or bulk hauling for human consumption.

2. Community water system: A public water system which serves at least 15 service connections used by year-round residents or regularly serves at least 25 year-round residents.

WETLANDS – Those areas that are inundated and saturated by surface or groundwater at a frequency or duration sufficient to support, and that under normal circumstances do support, a prevalence of vegetation typically adapted for life in saturated soil conditions, including swamps, marshes, bogs, and similar areas; or as further defined by the Pennsylvania Department of Environmental Protection.

WOODLAND – Generally, a land area characterized by a more or less dense and extensive tree cover. More particularly, a plant community predominantly of healthy trees and other woody vegetation, well-stocked and growing more or less closely together.

YARD – An open, unoccupied space on the same lot with a building or other structure or use, unobstructed from the ground to the sky.

YARD, FRONT – A yard extending the full width of the lot along the front line and extending in depth from the front lot line to the nearest point of any part of a structure (other than a fence) on the lot; the front yard shall contain no buildings.

YARD, REAR – A yard extending the full width of the lot along the rear lot line and extending in depth from the rear lot line to the nearest point of any part of a structure (other than a fence) on a lot.

YARD, SIDE – A yard extending the full depth of a lot along a side lot line and extending in width from such side lot line to the nearest point of any part of a structure (other than a fence) on the lot.

ARTICLE III: SUBDIVISION AND LAND DEVELOPMENT CONTROL

Section 301. Extent of Control

A. No lot, tract or parcel of land shall be subdivided and no land may be developed, and no street, sanitary sewer, storm sewer, water main, or concomitant facility may be laid out, constructed, opened, or dedicated for public use or travel, or for the use of occupants of buildings abutting or to abut on them, except in accordance with the provisions of this Ordinance and other applicable Township Ordinances.

B. No lot in a subdivision may be sold, no permit to build, alter, or repair any building on land in a subdivision or land development may be issued, and no buildings may be erected in a subdivision or land development until a final subdivision or land development plan has been approved and recorded, in accordance with this Ordinance and, where required, improvements have been completed or their completion has been assured by a performance guarantee consistent with the terms of Article V of the Municipalities Planning Code and with Sections 410 and 701 of this Ordinance.

C. The scope of this Ordinance shall include all matters over which, by law, the Township is authorized to exercise control by enactment and enforcement of this Ordinance, including, but not limited to:

1. All improvements within any tract undergoing subdivision or land development;
2. The improvement of public facilities, adjacent to any tract undergoing subdivision or land development, including streets and drainage facilities which border upon any such tract; and
3. The installation or enhancement of off-site improvements needed to adequately serve the subdivision or land development, provided that the extent of required off-site improvements shall be economically feasible in relation to the size and scope of the proposed subdivision or land development.

D. The granting of a permit, or the approval of a plan of subdivision or land development, shall not constitute a representation, guarantee, or warranty of any kind by the Township or by any official, employee, agent, or advisor of the Township as to the practicability, adequacy, functioning, or safety of any use, improvement, facility, or system installed or maintained pursuant to the aforementioned permit or approval, and such permit or approval shall not create any liability upon the Township, or upon any officials, employees, agents, or advisors thereof.

E. No section of this Ordinance shall be construed to prohibit condominium ownership as permitted by the Pennsylvania Uniform Condominium Act of 1980.

ARTICLE IV: PROCEDURE

Section 401. Municipal Review

Final authority for approval or denial of approval of all preliminary and final subdivision and land development plans shall be vested in the Board of Supervisors. However, prior to action by the Board, all such plans shall be referred to the Township Planning Commission for review and recommendation; provided, however, that the failure to make such referral and/or the failure of the appropriate municipal Planning Commission to review and/or make a recommendation with respect to any such plan shall not affect the validity of any action taken by the Board with respect to any such plan. In addition, the Planning Commission may solicit reviews and reports from adjacent municipalities, other governmental agencies, and other persons or entities that it considers necessary to ensure conformance with the Township's Comprehensive Plan and regulatory ordinances.

Section 402. Major and Minor Applications

A. For purposes of procedure, all applications shall be classified as either major or minor:

1. Major –

   a. Any subdivision other than a minor subdivision;

   b. Any land development that does not involve subdivision.

2. Minor – any subdivision in which:

   a. No street is to be constructed or widened;

   b. No other public improvement; i.e., intended to be dedicated to the Township, is to be constructed;

   c. No land disturbance activities will take place except those incidental to construction of a single-family dwelling on each lot; and

   d. No more than five lots are created.

B. Major applications shall be subject to all review procedures specified in this Article.

C. Where an application qualifies as a minor subdivision under the terms of this Section, the applicant may, at his discretion, seek approval according to the following procedures:

1. A sketch plan shall be submitted and reviewed in accordance with Sections 403 and 404 of this Ordinance; the requirements and procedures of Sections 405 and 406 regarding preliminary plans shall be waived, except that written comments on the sketch plan shall be presented by the Planning Commission to the applicant within the time period specified in §406-B.3 of this Ordinance.

2. A final plan, prepared in accordance with §503-A, §503-B(2) through B(10), §503-D, and §503-E, shall be submitted and reviewed in accordance with the applicable provisions of §407 and §408. As part of the final plan review process, copies shall be sent to the relevant Chester County agencies applicable to preliminary plans in §405-D of this Ordinance.

Section 403. Submission of Sketch Plan

A. All applicants for subdivision or land development approval may submit a sketch plan to the Township Planning Commission for review prior to submission of a formal application; except under the procedure for minor plans, however, submission of a sketch plan is not mandatory. Submission of a sketch plan does not constitute a formal subdivision or land development application.

B. Sketch plans shall be accompanied by supporting documentation such as photographs, a historical structure survey form for historical structures and any other documentation to orient the Planning Commission to the specifics of the site. See Appendix C for Historical Structure Survey Form.

C. Where a sketch plan is submitted, thirteen (13) copies of the plan shall be submitted to the Subdivision Officer for distribution a minimum of one week prior to the public meeting at which the plan will be presented.

D. The applicant is strongly urged to consult the conservation plan, stormwater management plan, and open space requirements of this Ordinance prior to submission of the sketch plan, in order to ensure the proposed subdivision or land development concept reflects those applicable requirements.

E. In preparing the sketch plan, the applicant also is advised to consult:

1. The Township's Planning Consultant.
2. The Chester County Planning Commission.
3. The Chester County Health Department concerning soil suitability when on-site sewage disposal facilities may be proposed.
4. The Chester County Conservation District concerning erosion and sedimentation control and the effect of geologic conditions on the proposed development.

Section 404. Review of Sketch Plan

A. The Township Planning Commission shall, at a meeting with the applicant, consider the suitability of the sketch plan for the development of the land and its relationship to the harmonious extension of streets and utilities, arrangement and density of housing, and compatibility of the plan with the Honey Brook Joint Comprehensive Plan of 1993, or subsequent editions. At the discretion of the Planning Commission, plans shall undergo review by the Township's Planning Consultant prior to receiving a recommendation from the Planning Commission. Based on this meeting and input from the Planning Consultant, the Planning Commission shall submit its written comments to the applicant; provided, however, that the failure of the Planning Commission to submit comments in writing shall not be deemed to be an approval of any application or to vest any rights in the applicant.

B. The applicant may, but need not, request further review of the sketch plan by the municipal governing body. If further review is requested, the governing body may consider the sketch plan, may consider the written or other comments of the Planning Commission, may meet with the applicant, and may advise the applicant as to the

governing body's comments with respect to the sketch plan; provided, however, that the governing body is not required to review the sketch plan nor to submit comments to the applicant if the governing body does review the sketch plan.

C. Nothing herein contained, nor the failure of the Planning Commission or the governing body, or both, to proceed or act in accordance with this Section, shall be deemed to be a decision with respect to any subdivision or land development plan or to vest any rights in the applicant.

Section 405. Submission of Preliminary Plan

A. All preliminary plans submitted pursuant to this Ordinance shall conform to the requirements of this Ordinance and shall, in addition, conform to such administrative regulations of the Township as may have been adopted by the Board at any time or from time to time and as shall be in effect and applicable to the submission at the time such submission is initiated. All submissions shall be on the form promulgated by the Township for the submission of subdivision or land development plans.

B. Official submission of a preliminary plan to the Subdivision Officer shall consist of:

1. Two (2) copies of the application for review of preliminary subdivision or land development plan on the form promulgated for this purpose.

2. Copies of the preliminary plan and all supporting plans and information to enable proper distribution and review, as follows:

   a. Two (2) complete plan sets, to include all supporting plans and information.

   b. One (1) complete plan set without supporting information accompanied by an Act 247 referral on a form provided by the Chester County Planning Commission.

   c. Thirteen (13) sets of the title sheet, lot layout sheet, grading sheet, landscaping sheet and other appropriate sheets as determined by the Subdivision Officer. Applicants are encouraged to contact the Township in advance to determine the appropriate sheets for submission.

   d. Four (4) sewer planning modules (as necessary for on-lot systems) with accompanying plot plan for each module.

3. Payment of application fees and deposit of escrow for plan review cost, as prescribed in the applicable fee schedule.

C. Copies of the preliminary plan and all required supplemental data initially shall be submitted to the Township Subdivision Officer, together with the required fees and escrow deposit established in accordance with the terms of this Ordinance. The Subdivision Officer shall note the date of receipt of the application, fees, and escrow deposit.

1. The application shall not be deemed to be submitted until a complete application and the required fees and the required escrow deposit all have been submitted.

2. The Subdivision Officer shall make a preliminary review of the application. If the Subdivision Officer determines that the application is defective on its face, he shall notify the applicant, and the application is deemed not accepted. The applicant may request the return of all submissions for the purpose of correction and resubmission.

D. Upon submission of a complete application, together with all required fees and escrow deposits, the Subdivision Officer shall accept the application, plans, and other required materials as filed, and shall transmit the requisite number of copies of the plans and other required materials to the municipal Planning Commission and the municipal engineer. In addition, copies shall be transmitted to:

1. Chester County Planning Commission (1 copy and Act 247 referral form).

2. Chester County Health Department (2 copies of the planning module with accompanying plot plans and referral letter) for review of matters relating to adequacy of the site to sustain on-site water and/or sewage disposal systems.

3. Township Planning Consultant (1 copy) for review of matters relating to consistency with the Comprehensive Plan.

4. Such additional persons or agencies as the Township shall determine.

All fees charged by these agencies for review shall be paid by the applicant.

E. The applicant is responsible for submitting plans to the Chester County Conservation District, the Pennsylvania Department of Transportation (HOP set) and the Pennsylvania Department of Environmental Protection (NPDES set) and paying all fees required by these agencies.

Section 406. Review of Preliminary Plan

A. Municipal Planning Commission

1. The Township Planning Commission shall review all plans referred to it and shall consider any recommendations made by any county agency, the municipal engineer, and any other persons or entity who shall have submitted comments with respect to any such application.

2. After such review, the Secretary of the Planning Commission shall send written notice of the recommendations of the Planning Commission and the reasons therefore, citing specific sections of statutes or Ordinances relied upon, to:

a. the Board of Supervisors

b. the applicant

c. the governing body of any other adjacent municipality, if the proposed project includes land in that municipality or directly abuts its boundaries.

B. Municipal Governing Body

1. When a preliminary plan has been officially submitted to the Board of Supervisors by the Planning Commission, such plan shall be placed on its agenda for review and action.

2. In acting on the preliminary subdivision or land development plan, the Board shall review the plan and the written comments of the Planning Commission, municipal engineer, County Planning Commission, and all other reviewing agencies, and comments from public hearings, if any, to determine conformity of the application to the standards or this and any other applicable Ordinance. The Board may specify conditions, changes, modifications, or additions to the application which it deems necessary and may make a decision to grant preliminary approval subject to such conditions, changes, modifications, or additions, citing appropriate Ordinance provisions as prescribed in Subsection 406-B-6.

3. For the purpose of Section 508 of the Municipalities Planning Code, the Township Planning Commission is the body which first reviews any application. All applications for preliminary approval of a plan shall be acted upon by the Board of Supervisors and communicated to the applicant within 90 days following the date of the regular meeting of the Planning Commission next following the date the application is filed, provided that should the said next regular meeting of the Planning Commission occur more than 30 days following the filing of the application, the said 90-day period shall be measured from the 30th day following the day the application is filed.

4. The decision of the Board shall be in writing and shall be communicated to the applicant personally or mailed to the applicant not later than 15 days following the decision or by the end of said 90-day period, whichever shall first occur. The form and content of the decision shall comply with applicable requirements of Section 508 of the Municipalities Planning Code.

5. When deemed desirable, the applicant may be requested to agree, in writing, to an extension of time beyond the 90-day period prescribed by this section in which a decision concerning the status of an application for approval of a plan is to be rendered. Upon receipt of the applicant's written agreement, the Board shall render a decision and communicate it, in the prescribed manner, to the applicant before termination of the extended time period.

6. Whenever the approval of a preliminary plan is subject to conditions, the written action of the Board as prescribed herein shall: (a) specify each condition of approval, citing relevant Ordinance provisions in each case, and (b) require the applicant's written agreement to the conditions. Where the applicant's written agreement is not received within the time allotted, the Board shall be deemed to have denied approval.

Section 407. Submission of Final Plan

A. The final plan shall conform to the terms of approval of the preliminary plan and to the most recent administrative regulations adopted by the Board.

B. The Board may permit submission of the final plan in sections, pursuant to the terms of Section 508(4) of the Municipalities Planning Code.

C. Official submission of a final plan to the Subdivision Officer shall consist of:

1. Two (2) copies of the application for review of final subdivision or land development plan on the form promulgated for this purpose.

2. Copies of the final plan and all supporting plans and information to enable proper distribution and review, as follows:

   a. Two (2) complete plan sets, to include all supporting plans and information that was updated from preliminary plan approval.

   b. Thirteen (13) sets of the title sheet, lot layout sheet, grading sheet, landscaping sheet and other appropriate sheets as determined by the Subdivision Officer. Applicants are encouraged to contact the Township in advance to determine the appropriate sheets for submission.

3. Payment of deposit of escrow for plan review cost.

D. Copies of the final plan and all required supplemental data initially shall be submitted to the Subdivision Officer, together with the required fees and escrow deposit established in accordance with the terms of this Ordinance. The Subdivision Officer shall note the date of receipt of the application, fees, and escrow deposit.

1. The application shall not be deemed to be submitted until a complete application, the required fees and the required escrow deposit all have been submitted.

2. The Subdivision Officer shall make a preliminary review of the application. If the Subdivision Officer determines that the application is defective on its face, he shall notify the applicant, and the application is deemed not accepted. The applicant may request the return of all submissions for the purpose of correction and resubmission.

E. Upon submission of a complete application, together with all required fees and escrow deposits, the Subdivision Officer shall accept the application, plans, and other required materials as filed and shall transmit the requisite number of copies of the plans and other required materials to the municipal Planning Commission and the municipal engineer. In addition, copies shall be transmitted to such additional persons or agencies as the Township shall determine.

F. Where the final plan is for a major subdivision, the requisite number of copies shall be submitted to the County Planning Commission and other applicable agencies for their review as would be required of a preliminary plan pursuant to Section 405-D, above.

Section 408. Review of Final Plan

A. Municipal Planning Commission

1. The Township Planning Commission shall review the final plan submitted and shall consider any recommendations of the municipal engineer and any other reviewing agency submitting comments.

2. After such review, the Secretary of the Planning Commission shall send written notice of the recommendations of the Planning Commission and the reasons therefore, citing specific sections of statutes or Ordinances relied upon, to:

   a. the Board of Supervisors

b. the applicant

c. the governing body of any other adjacent municipality if the proposed project includes land in that municipality or directly on its boundaries.

B. Municipal Governing Body

1. When a written report on a final plan has been officially submitted to the Board of Supervisors by the respective municipal Planning Commission, such plan shall be placed on the agenda of the Board for review.

2. Upon receipt of the Planning Commission's recommendation and other supporting information, the Board shall, at a regular or special meeting within the time limitations set forth herein below, either approve or disapprove the plan. The Board shall render a decision on all final plans and communicate that decision to the applicant not later than 90 days following the date of the regular meeting of the Planning Commission next following the date the application is filed, provided that should the said next regular meeting occur more than 30 days following the filing of the application, the said 90-day period shall be measured from the 30th day following the day the application has been filed.

3. The decision of the Board shall be in writing and shall be communicated to the applicant personally or mailed to him at his last known address not later than 15 days following the decision or by the end of the said 90-day period, whichever shall first occur. The form and content of the decision shall comply with applicable requirements of Section 508 of the Municipalities Planning Code.

4. When deemed desirable, the applicant may be requested to agree, in writing, to an extension of time beyond the 90-day period prescribed by this section in which a decision concerning the status of an application for approval of a plan is to be rendered. Upon receipt of the applicant's written agreement, the Board shall render a decision and communicate it, in the prescribed manner, to the applicant before termination of the extended time period.

5. In addition to the provisions of §408-C, the Board may specify conditions, changes, modifications, or additions to the application which it deems necessary and may make a decision to grant final approval subject to such conditions, changes, modifications, or additions. Whenever the approval of a final plan is subject to conditions, the written action of the Board as prescribed herein shall: (a) specify each condition of approval, citing relevant Ordinance provisions in each case, and (b) require the applicant's written agreement to the conditions. Where the applicant's written agreement is not received within the time allotted, the Board shall be deemed to have denied approval.

C. Every final plan approval shall be subject to these further conditions:

1. The applicant shall execute a subdivision and land development agreement in accordance with Section 409.

2. The applicant shall provide a performance guarantee in accordance with Section 410.

3. The applicant shall comply with the recording instructions contained in Section 411.

4. The applicant agrees, if requested, to tender a deed of dedication to the Township for such streets, any and all easements for sanitary sewers, water lines, or storm sewers, and improvements thereto, including street paving, sidewalks, shade trees, water mains, fire hydrants, sanitary and storm sewers, manholes, inlets, pumping stations, and other appurtenances as shall be constructed as public improvements and as are required for the promotion of public welfare, after all streets, sidewalks, sewers, and the like are completed and such completion is certified as satisfactory by the municipal engineer. The Board may require that the applicant supply a title insurance certificate from a reputable company before any property is accepted for the Township.

5. Whenever the applicant is provided open space as part of the development, an easement in perpetuity restricting such open space against further subdivision or development shall be executed between the applicant and the Township or an organization acceptable to the Township, and shall run to the benefit of the Township and lot purchasers in the subdivision or land development.

6. The applicant shall have applied for all required permits from agencies having jurisdiction over ancillary matters necessary to effect the subdivision or land development, such as the Pennsylvania Departments of Transportation (PennDOT) and Environmental Protection (DEP), the Public Utility Commission (PUC), and the Chester County Health Department (CCHD).

Section 409. Subdivision and Land Development Agreements

The applicant shall execute an agreement, to be approved by the Township, before the final plan is released by the Board and filed on record. Said agreement shall specify the following, where applicable:

A. The applicant agrees that he will lay out and construct all streets and other improvements, including grading, paving, curbs, gutters, sidewalks, street lights, fire hydrants, water mains, street signs, shad trees, storm and sanitary sewers, landscaping, traffic control devices, open space areas, and erosion and sediment control measures in accordance with the final plan as approved, where any or all of these improvements are required as conditions of approval.

B. The applicant guarantees completion and maintenance of all improvements by means of a type of financial security acceptable to the Township, as specified in §410-B of this Ordinance.

C. The applicant agrees to tender a deed or deeds of dedication to the Township for such streets and for such easements for sanitary and storm sewers, sidewalks, manholes, inlets, pumping stations, and other appurtenances as shall be constructed as public improvements, provided that the Township shall not accept dedication of such improvements until their completion is certified as satisfactory to the municipal engineer.

D. Whenever an applicant proposes to establish or continue a street which is not offered for dedication to public use, the Board of Supervisors shall require the applicant to submit,

and also to record with the plan, a copy of an agreement made with the Board on behalf of himself and his heirs and assigns, and signed by him, and which shall establish the conditions, if any, under which the street may later be offered for dedication, and shall stipulate, among other things:

1. That an offer to dedicate the street shall be made only for the street as a whole.
2. That the Township shall not be responsible for repairing or maintaining any undedicated streets.
3. That the method of assessing repair and maintenance costs of undedicated streets be stipulated, and be set forth in recorded deed restrictions so as to be binding on all successors or assigns.
4. That, if dedication be sought, the street shall conform to applicable Township specifications or that the owners of the abutting lots shall, at their own expense, restore the street to conformance with such specifications.

Section 410. Performance Guarantees

A. The applicant shall deposit with the Township financial security in an amount sufficient to cover the cost of all improvements (including both public and private improvements) and common amenities, including but not limited to streets, walkways, curbs, gutters, street lights, shade trees, stormwater detention and/or retention facilities, pipes and other related drainage facilities, recreational facilities, open space improvements, buffer or screen plantings and, except as provided for in §410-F hereof, water mains and other water supply facilities, fire hydrants, and sanitary sewage disposal facilities.

B. Financial security required herein shall be in the form of a Federal or Commonwealth chartered lending institution irrevocable letter of credit, a restrictive or escrow account in such institution or with a financially responsible bonding company, or such other type of financial security which the Township may, in its reasonable discretion, approve. The bonding company may be chosen by the party posting the financial security, provided that the said bonding company or lending institution is authorized to conduct business within the Commonwealth and stipulates that it will submit to Pennsylvania jurisdiction and County venue in the event of legal action.

C. The said financial security shall provide for, and secure to the public, the completion of all subdivision improvements for which such security is being posted on or before the date fixed in the Board's formal action of approval or accompanying agreement for completion of the improvements. The amount of financial security required shall be based upon an estimate of the cost of completion of the required improvements, submitted by an applicant or developer and prepared by a professional engineer, licensed as such in Pennsylvania, and certified by such engineer to be a fair and reasonable estimate of such cost. The Board, upon recommendation of the municipal engineer, may refuse to accept such estimate for good cause shown. If the applicant or developer and the Township are unable to agree upon an estimate, the estimate shall be determined in accordance with the terms of §509(g) of the Municipalities Planning Code.

D. The amount of financial security shall be equal to 110 percent of the cost of completion of the required improvements for which financial security is to be posted, in accordance

with the terms of §509(f) of the Municipalities Planning Code. If the party posting the financial security requires more than one year from the date of posting to complete the required improvements, the amount of financial security shall be increased by an additional 10 percent for each one year period beyond the first anniversary date from posting of financial security or to an amount not exceeding 110 percent of the cost of completing the required improvements as reestablished on or about the expiration of the preceding one year period by using the above procedure for estimating cost.

E. Where development is projected over a period of years, the Board may authorize submission of final plans by section or stage of development, subject to such requirements or guarantees as to improvements in the future sections or stages of development as it finds essential for the protection of any finally approved section of the development, and consistent with the terms of §508(4) of the Municipalities Planning Code.

F. If water mains or sanitary sewer lines, or both, along with apparatus or facilities related thereto, are to be installed under the jurisdiction and pursuant to the rules and regulations of a public utility or municipal authority separate and distinct from the Township, financial security to assure proper completion and maintenance thereof shall be posted in accordance with the regulations of the controlling public utility or municipal authority and shall not be included within the financial security as otherwise required by this Section.

G. As the work of installing the required improvements proceeds, the party posting the financial security may request the Board to release or authorize to be released, from time to time, such portions of the financial security necessary for payment to the contractor or contractors performing the work. Any such requests shall be in writing addressed to the Board of Supervisors, and the Board shall have 45 days from receipt of such request within which to allow the municipal engineer to certify, in writing, that such portion of the work upon the improvements has been completed in accordance with the approved plans. Upon such certification, the Board shall authorize release by the bonding company or lending institution of an amount as estimated by the municipal engineer fairly representing the value of the improvements completed. The municipal engineer, in certifying the completion of work for a partial release, shall not be bound to amount requested by the applicant, but shall certify to the Board his independent evaluation of the proper amount of partial releases. The Board may, prior to final release at the time of completion and certification by the municipal engineer, require retention of 10 percent of the estimated cost of the aforesaid improvements as per Section 803-D of this Ordinance.

Section 411. Recording of Final Plan

A. The Township shall be provided a minimum of six (6) paper copies of the final plan for endorsement. Additionally, for major subdivisions, the applicant shall provide two (2) digital copies of the plan as follows:

1. A digital submission in either a .dxf or .dwg format compatible with AutoCAD 2000 LT. This submission shall be on a compact disc (CD) in uncompressed format or a ZIP disc standard compression format only. The digital submission shall provide an exact duplicate of paper drawings. Raster format data or external

drawing data shall be imported as blocks, not external references. Proprietary fonts shall not be used. Elevations shall be referenced to the State Plane Coordinate System.

2. The digital submission shall be prepared to meet commonly accepted drafting and engineering industry standards for layers, but shall, as a minimum, include descriptive information layers containing the following:

   a. Lot lines (no text).

   b. Right-of-way lines (no text).

   c. Street center lines (no text).

   d. Edge of pavement lines/curb lines.

   a. Easements; separate layers for water, sanitary sewer and stormwater, which must be further separated for improvements offered for dedication and those improvements to be held in private deed restrictions.

   e. Floodhazard; separate layers for FEMA, soil delineated and calculated floodhazards.

   f. Utilities; separate layers for water and sanitary sewers.

   g. Stormwater facilities; separate layers for facilities offered for dedication and those to be held in private ownership and/or under easement, i.e., swales, basins, etc.

B. Within 90 days of the applicant's execution of the subdivision and land development agreement and performance guarantee, the final plan shall be recorded by the applicant in the office of the Recorder of Deeds of Chester County, and a copy of the recorded plan shall be furnished to the Township. If such plan should fail to be recorded within the specified period of time, and the time for recording the plan has not been extended by written action of the Board of Supervisors, then the approval thereof shall be considered null and void. The Board may reinstate approval of the plan and authorize its recording where, following expiration of the 90-day period or any approved extension thereof, no significant changes to relevant Ordinance provisions or to other circumstances relevant to the proposed plan have been made. Conversely, if the Board finds that such changes have occurred, the original plan approval shall continue to be null and void.

Section 412. Commencement of Development

A. No construction or land disturbance activities (not including soil or percolation testing, well drilling, or similar engineering or surveying activities) shall be commenced until the applicant submits to the Township a copy of the Recorder of Deeds' receipt for recording of the final plan.

B. No application for a building permit under the Township Zoning Ordinance shall be submitted and no building permit under the Township Zoning Ordinance shall be issued for any building in any subdivision or land development and no work shall be done on any building in any subdivision or land development until the final plans for the said subdivision or land development have been approved an recorded as provided for an until

the terms of Section 412-A hereof have be satisfied. Further, where final subdivision or land development approval has been conditioned upon the submission and approval of individual lot grading plans for some or all of the lots, no building permit shall be issued for construction on any such lot until this condition has been complied with.

C. No water system or sewer system, including extensions to existing systems or new systems employing sewage treatment plants, shall be constructed prior to the issuance of appropriate permits from the Pennsylvania Department of Environmental Protection or from federal or local agencies, as required.

Section 413. Time Limitation of Plans

The approval of any subdivision or land development plan shall be effective for the five (5) year period established by §508(4) of the Municipalities Planning Code, as amended from time to time. The aforementioned section of the Municipalities Planning Code shall control any phased submission and any vested rights which may accrue from the date of preliminary plan approval.

Section 414. Plan Amendments

Major modifications of the approved plan, as determined by the Township, shall be resubmitted and reprocessed in the same manner as the original plan. All site disturbance activities shall cease pending approval of modified plans.

ARTICLE V: PLAN CONTENT REQUIREMENTS

Section 501. Sketch Plan

A. It is strongly suggested that the applicant submit a sketch plan as a basis for informal discussion with the Planning Commission and, as appropriate, the Board of Supervisors as to the intended use and arrangement of proposed subdivision or land development.

B. The applicant may submit whatever information he deems useful; however, to facilitate the fullest possible response from the Planning Commission, the applicant is encouraged to submit the following items:

1. Name and address of the owner/applicant;
2. Name and address of the applicant's engineer, surveyor, planner, architect, or landscape architect, if available;
3. Scale of sketch and graphic scale; the plan need not be exact scale, nor are precise dimensions required, but it should be clearly titled "Sketch Plan;"
4. Approximate tract boundaries;
5. North point;
6. Location map;
7. Streets on and adjacent to the tract;
8. Topographical and physical features, including contours (minimum 10' intervals);
9. Proposed general lot, building and street layout;
10. Applicable zoning requirements; and
11. In the case of land development plans, proposed general layout, including building locations, parking lots, and open spaces.

Section 502. Preliminary Plan

A preliminary plan shall consist of and be prepared in accordance with the following:

A. Drafting Standards

1. Subdivision or land development plans submitted for review for preliminary approval shall be clear and legible black or blue on white prints of the drawings. Space shall be provided for signatures by the Board on the face of the plans.
2. Preliminary plans shall be on sheets not larger than 34 inches by 44 inches overall. It is recommended that, as far as practicable, final plan sheets be held to the following overall sizes: 17 inches by 22 inches, 24 inches by 36 inches, 30 inches by 42 inches. Where necessary to avoid sheets larger than the maximum size prescribed above, preliminary plans shall be drawn in two or more sections, accompanied by a key diagram showing relative location of the sections.
3. The scale shall be one inch = 50 feet or less, except that, where proposed lots are to be greater than five acres in size, the scale may be one inch = 100 feet.

4. Dimensions shall be set in feet and decimal parts thereof, bearing in degrees, minutes, and seconds (errors of closure shall not be more than one part per 10,000).

5. Each sheet shall be numbered and shall show its relationship to the total number of sheets.

6. The plan shall bear an adequate legend to indicate clearly which features are existing and which are proposed.

7. All plans and surveys shall be prepared in accordance with the Act of May 23, 1945 (P.L. 913, No. 367), known as the Professional Engineers Registration Law.

B. Site Design and Layout Plan

1. A key map for the purpose of locating the site to be subdivided or developed, at a scale that assures readability, shall show the relation of the tract to adjoining property and to all streets and municipal boundaries existing within 1000 feet of any part of the property proposed to be subdivided or developed. This map shall be drawn at a minimum scale of one inch=1000 feet.

2. A series of maps, prepared according to §502-A, above, with accompanying narrative as needed, shall show the following:

   a. Proposed subdivision or land development name or identifying title.

   b. Name and address of the landowner of the tract or of his authorized agent, if any.

   c. Name and address of the registered engineer or surveyor responsible for the plan. If an architect or landscape architect collaborated in the preparation of the plan, his name and address also shall appear.

   d. Zoning information, including: applicable district, lot size and yard requirements, proof of any variance, special exception or conditional uses, which may have been granted, and any zoning boundaries that traverse or are within 200 feet of the tract.

   e. Tract boundaries showing bearings and distances.

   f. Total acreage of the tract being subdivided.

   g. Original date of preparation, revision dates, north point, and graphic and written scale.

   h. The names of all owners and the deed references of all adjacent lands, the names of all proposed and existing subdivisions adjacent, and the locations and dimensions of any streets and/or right-of-way easements shown therein.

   i. The locations and dimensions of all existing streets, bridges, culverts, pipes, railroads, sewers and sewage systems, aqueducts, water mains and feeder lines, fire hydrants, gas, electric, and oil transmission lines, water courses, buildings, sources of water supply, easements, and other

significant features within the property or any adjacent property, or within any other property which the Planning Commission feels could be impacted by the proposed development or subdivision.

j. The locations and widths of any streets or other public ways or places as shown upon an adopted local or county plan, if such plan exists for the area to be subdivided or developed.

k. Identification of all historically significant sites or structures within the property or any adjacent property, or within any other property which the Planning Commission feels could be impacted by the proposed development or subdivision. The applicant shall submit a historic structure/site survey form for each area on the plan. If there are no historic structures, a plan note to that effect is required.

l. Locations of walkways, paths, trails (pedestrian, equestrian, bicycle, etc.), traversing the site and extending beyond it that have been in public use. Proposals for their continued protection through easement or otherwise shall be included.

m. Locations of known or potentially sensitive ecological areas such as endangered species habitats.

n. A full plan of the development, showing proposed lot layout with lots numbered in consecutive order and individual lot dimensions sufficiently detailed to demonstrate to the Township how the proposed layout compares to zoning requirements and that it is mathematically attainable within the parcel being subdivided, and location of areas to be subject to easements of any kind.

(Note) In addition, the plan for a *land development* shall show, where applicable, proposed building locations, location and size of parking lots, provisions for access and traffic control, locations of loading docks, and provisions for landscaping and lighting of the site.

o. Where the plan submitted covers only a part of the applicant's entire holding and where specifically required by the Township Planning Commission, a sketch plan of the prospective future street system of the unsubmitted part; the street system of the submitted part will be considered in light of adjustments and connections with future streets in the part not submitted.

p. In addition to all other requirements, plans for conservation designs or multi-family developments also must include the following information:

[1]. Areas that are proposed to remain open or wooded.

[2]. Recreational areas.

[3]. Areas to be used for agriculture.

[4]. Total dwelling units, number of buildings, proposed density, total parking spaces, proposed and required by the zoning ordinance.

q. Where subdivision of land is proposed as a part of land development because of creation of mortgages encumbering less than the entire tract, a plan shall be submitted showing the proposed division of property, including fee-simple access to all parcels not fronting on public roads. Such access shall be a minimum of 50 feet wide.

3. All preliminary plans shall be accompanied by Planning Modules for Land Development provided by the Pennsylvania Department of Environmental Protection, including information with regard to the means of sewage disposal and provision of water supply and, if on-site sewage facilities are contemplated, certain test pit and percolation test information as called for in Section 622-D, in order that the Township may have sufficient information to make a determination if the proposed subdivision or land development adequately meets the sewage disposal needs of the Township.

4. A statement or certificate by the engineer or surveyor indicating that the plans are, or are not, in conformity with engineering, zoning, subdivision, building, sanitation, and other applicable ordinances and regulations and if they are not so conforming, the reasons for requesting an exception. Proposed zoning changes shall note the suggested locations of buildings in connection therewith.

C. Improvements Construction Plan

1. A statement describing proposed public improvements, including: streets and gutters, a typical cross-section diagram of proposed street construction, and the means of water supply and sewage disposal to be provided.

2. A plan or plans showing location, width, and names of all proposed streets and street rights-of-way, and including: all street extensions or spurs as are reasonably necessary to provide adequate street connections and facilities to adjoining developed or undeveloped areas; preliminary profiles for proposed streets; proposed minimum setback line for each street; location and dimensions of playgrounds, public buildings, public areas, and parcels of land proposed to be dedicated or reserved for public use.

3. Where public sewer service is determined to be available through connection to the Northwestern Chester County Municipal Authority system, or where a community sewage system is anticipated, the preliminary design of sewage systems, including but not limited to the location and grade of sewers, pumping stations, sewer mains and, where applicable, sewage treatment plants and wastewater reclamation/land application sites, showing the type and degree of treatment intended and the size, capacity, and location of treatment facilities. Also, if required by the Authority or the Board of Supervisors, the location of a proposed right-of-way not less than 30 feet in width along natural watercourses and where otherwise necessary in order to permit the Authority and/or Township to construct and maintain sanitary and/or storm sewers as and when required.

4. Where off-site or central water service is anticipated, the preliminary design of water distribution facilities, including the size and location of water mains, fire hydrants, storage tanks and, where appropriate, wells or other water sources.

5. If land to be subdivided lies partly in another municipality, the applicant shall submit information concerning the location and design of streets, layout and size of lots, and provision of public utilities on land subject to his control within the adjoining municipality. The design of public improvements shall provide for a smooth, practical transition where specifications vary between municipalities. Evidence of approval of this information by appropriate officials of the adjoining municipality also shall be submitted.

6. Where the applicant proposes to install the improvements in sections, he shall submit with the preliminary plan, pursuant to Section 508(4) of the Municipalities Planning Code, a delineation of the proposed sections and a schedule of deadlines within which applications for final approval of each section are intended to be filed.

D. Conservation Plan

A conservation plan shall be submitted as part of the preliminary plan application and shall include the following minimum information:

1. Site Inventory of Existing Features. The applicant shall identify the following site features, as applicable, by displaying them on the property base map:

   a. Topography, the contour line intervals of which shall be not more than two feet for land with average natural slope of 10% or less, and at intervals of not more than five feet for land with average natural slope exceeding 10%. Location and elevation to which contour elevations refer shall be identified; where reasonably feasible, this shall be a known established benchmark. Slopes exceeding 15% shall be clearly indicated. Topography obtained from the most current USGS 7.5 minute series quadrangle map may be utilized when the applicant can demonstrate that a lot or lots have been restricted from future development.

   b. The location and delineation of ponds, streams, wetlands (as mapped in the Honey Brook Joint Comprehensive Plan), natural drainage swales, areas of hydric soils, and Flood Hazard boundaries. Where the proposed subdivision and/or land development lies partially or completely within any Flood Hazard Boundary plain area (as delineated in the Township Zoning Ordinance) or areas of hydric soils as identified by the Chester County Soils Conservation Service, the conservation plan shall include a map showing the following:

      [1]. the 100-year flood plain boundaries and elevations, which shall be those determined by the Federal Insurance Administration or from other known sources or, in the absence of such, shall be as calculated by the applicant;

      [2]. contours at 2-foot intervals, except as noted in Section 502.D.1.b;

[3]. areas of jurisdictional wetlands, as defined by the Army Corps of Engineers;

[4]. areas subject to special deed restrictions;

[5]. the location and elevation of proposed roads, utility and building sites, fill and erosion and/or flood protection facilities.

c. Soil series, types, and phases, as mapped by the USDA Soil Conservation Service, and accompanying data tabulated for each soil, including: name, depth to seasonal high water table, agricultural capability class, erodibility (if data are available), and hydrologic group.

d. Vegetative cover conditions on the property according to general cover type; e.g., cultivated land, permanent grass land, old field, hedgerow, tree line, orchard, woodland, etc. For all woodlands the applicant shall indicate the principal species of dominant and co dominant trees and the shrub understory. Areas occupied by specimen trees, as identified by the municipality, shall be indicated, along with the species of such trees.

e. Historic resources, including structures, ruins, sites, traces, and relationship to the boundaries of any National Register historic district.

f. Existing paths and trails.

g. A delineation of those portions of the tract visible from adjacent public roads, together with any areas or sites deemed visually significant as identified on the map of scenic resources in the Honey Brook Joint Comprehensive Plan.

2. Impact Assessment. The site features identified in §502-D(1), above, shall be shown on plan map(s) or on a transparent overlay at the same scale as plan map(s) submitted, in order to determine the locational relationship of identified site features to development as proposed, including proposed structures, roads, driveways, parking areas, stormwater management facilities, recreation facilities, sewage or water lines or facilities, changes to natural grade, and vegetation removal. This overlay shall be provided when requested by the Township Planning Commission or Engineer.

E. Stormwater Management Plan

A plan for the management of stormwater, including the control of erosions and sedimentation during the course of site preparation or any other land disturbance, shall be submitted as part of the preliminary plan application. The plan shall, at minimum, comply with the standards and criteria contained in Section 627 of this Ordinance. The following shall be shown on the property line base map:

1. All existing facilities and natural systems for controlling stormwater runoff.

2. All proposed earthmoving and grading, including devices and measures to control erosion during land disturbance, as well as stabilization and site restoration measures.

3. All proposed facilities and natural systems for controlling stormwater runoff, including:

   a. The location of drainage swales, basins, infiltration structures, pervious surfaces, etc.

   b. The size elevation, and location of manholes, pipes, inlets, and endwalls.

   c. Preliminary designs of any bridges or culverts that may be required.

   d. The proposed grading of building lots, to include but not limited to, floor elevations and locations of all proposed buildings, access driveways and parking areas.

Section 503. Final Plan

Final plans shall conform in all important details to preliminary plans, including any conditions specified by the Board. A final plan shall consist of and be prepared in accordance with the following:

A. Drafting standards

1. Subdivisions or land development plans submitted for review for final approval shall be clear and legible black or blue on white prints of the drawings. Space shall be provided for signatures by the Board on the face of the plans.

2. Final plans shall be on sheets not larger than 34 inches by 44 inches overall. It is recommended that, as far as practicable, final plan sheets be held to the following overall sizes: 17 inches by 22 inches, 24 inches by 36 inches, 30 inches by 42 inches. Where necessary to avoid sheets larger than the maximum size prescribed above, final plans fall be drawn in two or more sections, accompanied by a key diagram showing relative location of the sections.

3. The scale shall be one inch = 50 feet or less, except that, where proposed lots are to be greater than five acres in size, the scale may be one inch = 100 feet.

4. Dimensions shall be set in feet and decimal parts thereof, bearing in degrees, minutes, and seconds (errors of closure shall not be more than one part per 10,000).

5. Each sheet shall be numbered and shall show its relationship to the total number of sheets.

6. The plan shall bear an adequate legend to indicate clearly which features are existing and which are proposed.

7. All plans and surveys shall be prepared in accordance with the Act of May 23, 1945 (P.L. 913, No. 367), known as the Professional Engineers Registration Law.

B. Site Design and Layout Plan

1. All information required in §502-B(2), above,

2. Sufficient data to determine readily the location, bearing, and length of every lot and boundary line and to produce such lines upon the ground, including all

dimensions, angles, or bearings of lines and areas of each lot and of each area proposed to be dedicated to public use. The gross and net area of the parent tract and the individual lots being proposed shall be included.

3. Proposed house locations, approved street names and approved situs addresses. The Township shall coordinate street names with the Chester County Department of Emergency Services prior to final plan submission. The Township shall approve all street names and assign situs addresses throughout the municipality prior to final plan submission.

4. Location of permanent reference monuments.

5. A certificate of title showing the ownership of the land to be vested in the subdivider or other applicant for plan approval.

6. A statement duly acknowledged before an officer authorized to take acknowledgements of deeds and signed by the owner or owners of the property, to the effect that the subdivision or land development shown on the final plan is made with his or their free consent and in accordance with his or their desires.

7. All offers of dedication and covenants governing the reservation and maintenance of undedicated open space, which shall bear the certificate of approval of the Township Solicitor as to their legal sufficiency.

8. A copy of such private deed restrictions, including building setback lines, as may be imposed upon the property as condition to sale, together with a statement of any restrictions previously imposed which may affect he title to the land being subdivided. Such restrictions shall be satisfactory to the Board.

9. Such certificates of approval (or of preliminary approval) by proper authorities of the Commonwealth as may have been required by the Board or by this Ordinance.

10. Certification of the engineer, land surveyor, landscape architect, or land planner who prepared the plan that the plans are in conformity with zoning, building, sanitation, subdivision, and other applicable Township Ordinances and regulations. In any instance where such plans do not conform, evidence shall be presented that an exception or waiver has been authorized. The waivers, special exceptions and variances granted shall be lettered on the record plan sheet with the appropriate section references and date that relief was granted.

C. Improvements Construction Plan

Where public improvements other than monuments and street traffic signs are to be required for any subdivision or land development, an improvements construction plan and specifications prepared by a registered professional engineer shall be filed, setting forth the nature and location of the work and all engineering data necessary for completion of the work. The improvements construction plan and specifications shall be subject to approval by the Board of Supervisors as a prerequisite to approval of the final plan. The improvements construction plan shall conform to the following standards and shall contain the following information:

1. The improvements construction plan shall be at one of the following scales:

HORIZONTAL	VERTICAL
100’ = 1 inch	10’ = 1 inch
50’ = 1 inch	5’ = 1 inch

2. Where streets are proposed for dedication, a plan is required of street profiles and cross-sections incorporating the following information:

   a. The profile plan shall show the vertical section of the existing grade and proposed grade along with the centerline of the proposed street. Where storm drainage and/or sanitary sewer lines are to be installed, they also shall be indicated on the profile plan.

   b. A typical cross-section of street construction shall be shown on the profile plan and shall indicate the following:

      [1]. Right-of-way width and the location and width of paving within a right-of-way.

      [2]. Type, thickness, and crown of paving, including base and sub-base.

      [3]. The location, width, type, and thickness of curbs, sidewalks, and stone sub-base to be installed, if any.

      [4]. Typical location, size, and depth of any underground utilities that are to be installed in the right-of-way, where such information is available.

3. If required, a plan for location and type of street lights to be installed, together with the necessary contract for street light installation for approval by the Township.

4. Where off-site or community sewer service is to be provided, the final design of all facilities, including but not limited to sewer mains, manholes, pumping stations, and sewage treatment facilities shall be designed in accordance with PADEP standards.

5. Where off-site or central water service or water supply is to be provided, the final design, including location and size of all water service facilities within the subdivision, shall be shown, including wells, storage tanks, pumps, mains, valves, and hydrants. The plan shall contain a statement that the placement of fire hydrants and the components of the system have been reviewed by the Fire Marshall and that both are compatible with the firefighting methods and equipment utilized by local fire companies.

D. Conservation Plan

A conservation plan as stipulated in Section 502-D, consistent with the terms of preliminary plan approval and modified as necessary to reflect the proposal for final approval.

E. Stormwater Management Plan

A stormwater management plan as stipulated in Section 502-E, consistent with the terms of preliminary plan approval and modified as necessary to reflect the proposal for final approval.

ARTICLE VI: DESIGN STANDARDS

Section 601. Application

A. The following principles, standards, and requirements shall be applied by the Board of Supervisors in evaluating plans for proposed subdivision and land development. In addition, the standards set forth in the Township Zoning Ordinance for the particular district in which the subdivision or land development is taking place shall govern the layout of lots and/or design of buildings, parking lots, and other facilities.

B. The standards and requirements outlined herein shall be considered minimum standards and requirements for the promotion of public health, safety, and general welfare. Further discussion of the interpretation and authority of this ordinance and related regulations is contained in Section 104 of this ordinance.

Section 602. Land Requirements

A. Land shall be suited to the purposes for which it is to be subdivided or developed. Proposed land developments shall be coordinated with existing nearby neighborhoods so that the community as a whole may develop harmoniously.

B. No land shall be developed for residential purposes unless all hazards to life, health, or property from flood, fire, and disease shall have been eliminated or unless the plans for the development shall provide adequate safeguards against such hazards.

C. No plan of subdivision or land development shall be approved which would result in lots or land use, or which would in any other way be, inconsistent with the Township Zoning Ordinance then in effect for the zoning district in which the land to be developed or subdivided is located.

Section 603. Blocks

A. The length, width, and shape of blocks shall be determined with due regard to:

1. Provision of adequate sites for buildings of the type proposed.
2. Topography.
3. Requirements for safe and convenient vehicular and pedestrian circulation.
4. Thoughtful and innovative design to create an attractive community and where appropriate, opportunities for the utilization of solar energy.

B. Blocks shall have a maximum length of 1,200 feet and a minimum length of 600 feet, except that in the Commercial (C) District, a minimum length of 400 feet shall be permitted. In the design of blocks, special consideration should be given to access for fire protection, whether by an easement for emergency access or sidewalk installation.

C. Residential blocks shall be of sufficient depth to accommodate two tiers of lots, except where reverse frontage lots are used.

D. Blocks for commercial and industrial areas may vary from the elements of design contained in this section if the nature of the use requires other treatment. In such cases,

off-street parking for employees and customers may be required along with safe and convenient limited access to the street system. Space for off-street loading may also be required with similar access. Space for the extension of streets, railroad access right-of-way, and utilities shall be provided. The amount of parking space shall be as required by the applicable zoning ordinance.

Section 604. Lots and Lot Sizes

A. Lot dimensions and areas and minimum front yard setbacks shall not be less then as required by the Township Zoning Ordinance, as either may be amended from time to time.

B. Frontage

1. Except as provided in Subsection F, below, all lots shall have frontage along the right-of-way line of an existing street and direct access to the same. Each lot shall have, in addition to the required minimum width at the front lot line, sufficient free and complete access to an existing or proposed street cartway to avoid the need to cross any portion of another lot to reach such street, unless topographic conditions do not permit using said frontage as stipulated above.

2. Double frontage lots are prohibited, except as provided in Subsection D, below.

3. Lot frontage shall not be less than the minimum requirement of the applicable zoning ordinance, except that on the outside of a curved residential street a minimum frontage of 50 feet may be deemed acceptable by the Board, provided that proper lot width is attained at the building setback line in conformity with the requirements of the applicable zoning ordinance.

C. In general, side lot lines shall be substantially at right angles or radial to street lines. The Township shall encourage flexibility in lot layout so that the sitting of buildings takes maximum advantage of solar energy; e.g., the orientation of buildings with their long axis generally in an east-west direction.

D. Reverse Frontage Lots. Any proposed lots abutting an existing or proposed arterial or major collector street in the Township shall be designed as reverse frontage lots having direct access only to a minor collector or local street, as specified in the Township Zoning Ordinance. This requirement may be waived by the Board of Supervisors if, in its judgment: i) the advantages to the Township of compliance with this standard are outweighed by the applicant's resulting inability to meet other requirements of this ordinance or the zoning ordinance (minimum dimensions, layout of lots, disturbance of slopes, etc.); or ii) compliance would be unreasonable or impractical due to the size of the proposed development, configuration of the site, etc.

E. Site addresses and street names shall be assigned to each lot by the Township in accordance with established methods, and shall be noted on the plan prior to submission as outlined in Section 411.

F. Interior Lots

1. No more than two contiguous flag lot access strips shall be formed. The creation of such lots shall be minimized and limited to those circumstances dictated by the

configuration of the site; however, the applicant shall not be permitted to use interior lot design to avoid constructing or extending streets.

2. For any subdivision of 20 lots or fewer, there shall be a maximum of two flag lots. In subdivisions with more than 20 lots, a maximum of 15% of the total lots may be flag lots.

3. No more than two lots in depth (i.e., one tier of interior lots) shall be created along a new or existing street; access to any other lots shall be taken directly from a new street

4. A flag lot, once subdivided, shall not be further subdivided without the provision of direct public road access.

5. An interior lot shall have a fee-simple access strip, with a minimum width for its entire depth of 25 feet, which connects to a street.

6. Any driveway constructed in the access strip connecting the main portion of a flag lot with a public road shall be provided with full and adequate drainage facilities which shall be approved by the Township Engineer.

7. If any portion of a flag lot access strip located within 100 feet of a public road exceeds an average grade of 8%, off-street parking for two vehicles shall be provided within an area 100 feet from such public road along the proposed driveway.

8. The minimum distance separating two contiguous flag lot access strips from any additional flag lot access strip(s) shall not be less than two times the lot width (at the building line) required within the applicable zoning district.

Section 605. Street System

A. Proposed streets shall be properly related to such street plans or parts thereof as have been officially prepared and adopted by the Township, including recorded subdivision plans and the Official Map of the Township, and shall be classified according to their function.

B. Proposed streets shall further conform to such Township, County and State road and highway plans as have been prepared, adopted, and filed as prescribed by law.

C. Thoughtful and imaginative design of streets and their relationship to the arrangement and shape of lots is required. Streets shall be logically related to the topography so as to produce usable lots, curvilinear design, reasonable grades, proper alignment and drainage; to provide for adequate vision; and to enhance opportunities for the utilization of solar energy. To the degree possible, lot configuration and street design in areas immediately adjacent to the Borough should conform to the grid pattern present in the Borough.

D. Minor collector and local streets shall be laid out so as to discourage through traffic, but provisions for street connections into and from adjacent areas may be required by the Board of Supervisors. Secondary and through highways shall be connected with such existing streets and highways so as to form continuations thereof.

E. If lots resulting from original subdivision are large enough to permit resubdivision, or if a portion of the tract is not subdivided, adequate street rights-of-way to permit further subdivision shall be provided as necessary, to be no less than the rights-of-way then required for minor collector or local streets. Remnants, reserve strips and landlocked areas shall not be created.

F. Additional Right-of-Way and Improvements

1. Where a subdivision or land development abuts or contains an existing or proposed major collector or arterial street, the Board may require dedication of additional right-of-way to provide the minimum right-of-way specified hereinafter, as well as marginal access streets, rear service alleys, reverse frontage lots, or such other treatment as will provide protection for abutting properties, reduction in the number of intersections with the major street, and separation of local and through traffic.

2. Where warranted because of additional traffic, drainage, or comparable problems/conditions, both sides of said major street are to be improved as a responsibility of the applicant himself, or by means of sufficient funds escrowed for use by the Township to execute such improvement.

G. Half or Partial Streets

1. New half or partial streets shall not be permitted except where essential to reasonable development of a tract in conformance with the other requirements and standards of this Ordinance and where, in addition, dedication of the remaining part of the street has been secured.

2. Wherever a tract to be developed borders an existing half or partial street, the other part of the street shall be plotted within such tract. Where new half or partial streets are proposed, the acceptance of final plans shall be conditioned upon the provision of guarantees assuring the construction or completion of such streets to Township standards.

H. Dead-end streets shall be prohibited, except as stubs to permit future street extension into adjoining tracts or when designed as cul-de-sac streets. A plan note is required informing future lot buyers the dead end or cul-de-sac street will be connected in the future at the Township's sole discretion.

I. Continuations of existing streets shall be known by the same name, but names for other streets shall not duplicate or closely resemble names for existing streets in the region. In all cases, however, all street names are subject to the approval of the Township Planning Commission and Board of Supervisors.

J. Where streets continue into adjoining municipalities, evidence of compatibility of design, particularly with regard to street widths, shall be submitted. The applicant shall coordinate such designs with both municipalities to avoid abrupt changes in cartway width or in improvements provided.

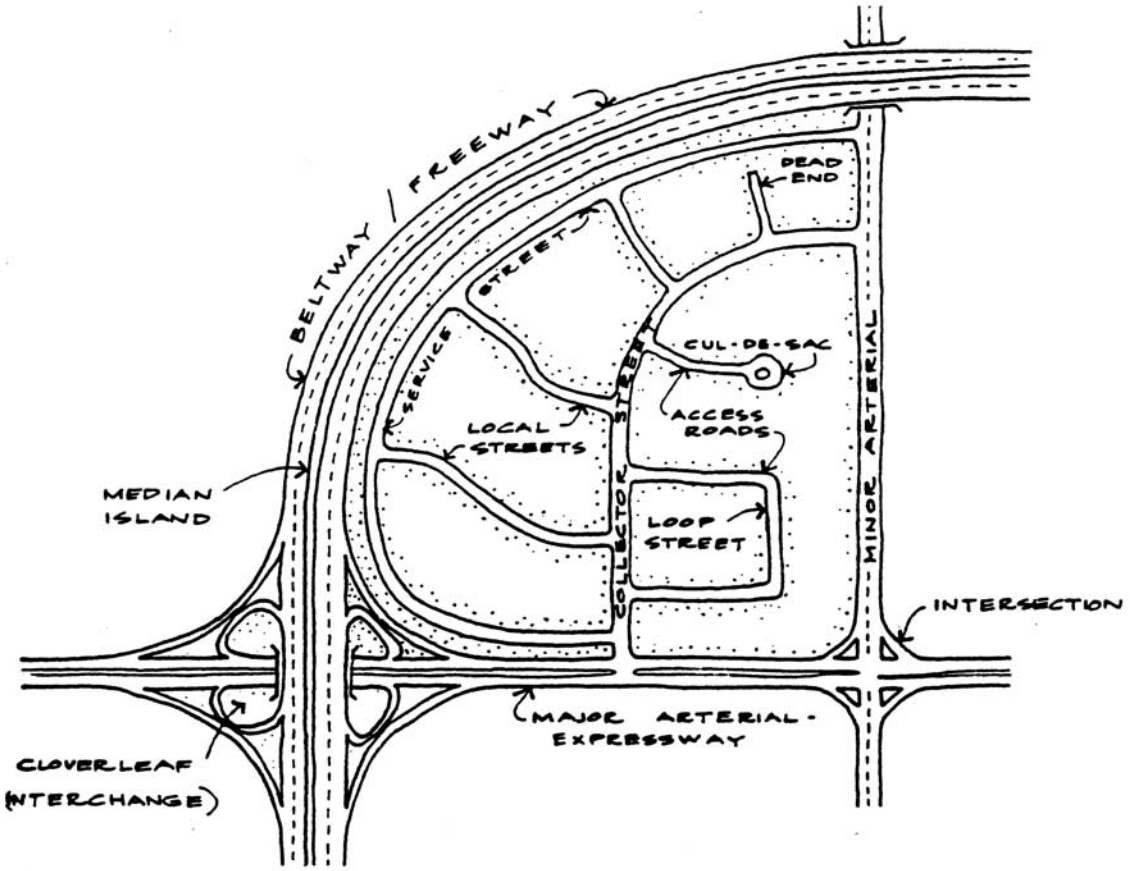

K. New streets shall be laid out to continue existing streets at equal or greater width, as regards both cartway and right-of-way, where such continuations are reasonable and practical. Minimum widths shall be as established in Section 607, below.

Section 606. Cul-de-sac and Other Single-access Streets

A. Single-access (including cul-de-sac) streets permanently designed as such shall be limited to a maximum length of 800 linear feet. This distance shall be measured from the point of intersection of the street centerlines to the center point of the circular turnaround.

B. A permanent cul-de-sac shall have a circular turnaround with a minimum right-of-way radius of 60 ft. and an outer paving radius of 50 ft.

C. The turnaround right-of-way of a cul-de-sac street shall be placed adjacent to the tract boundary with a 50-foot right-of-way width provided along or to the boundary line to permit extension of a street at full width, unless future expansion of a cul-de-sac street is clearly impractical or undesirable. The small triangles of land beyond the cul-de-sac to the boundary shall be dedicated to the Township.

D. A permanent cul-de-sac may not be approved when a through street or single access loop street, is possible.

E. The turnaround portion of a cul-de-sac street shall have a maximum slope of 5 percent across the diameter in any direction.

F. Cul-de-sac streets with centerline slopes less than 2 percent, which are level or nearly so across the diameter perpendicular to the centerline, must be graded so that there is a minimum 2 percent fall in all drainage swales around the cul-de-sac.

G. No more than four lots shall have frontage on the circular turnaround portion of a cul-de-sac street, and no more than four driveways may have access to the circular turnaround portion. A maintenance easement shall be provided for purposes of snow removal at a location to be determined by the Township Engineer.

H. All circular turnaround areas shall be designed with a left offset and incorporate a center island of sufficient radius to reduce the cartway width to a maximum of 18 feet. Rolled (mountable) curbing shall be utilized when designing the center island and nothing shall be planted within 10 feet of the island curb that would prohibit access/maneuver of emergency vehicles. The island landscaping plan shall be reviewed by the Planning Commission and approved by the Board. The maintenance of the island shall be the responsibility of the respective lot owner(s) that have frontage along the bulb.

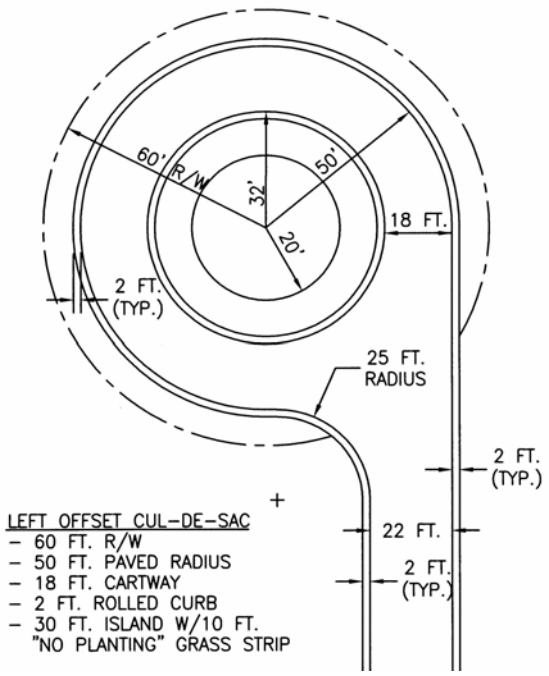

Section 607. Street Width

A. The minimum right-of-way and cartway widths for all new streets in the Township shall be as follows:

Type of Street		Right-of-Way	Cartway*
1.	Principal arterial	80’	PennDOT standard
2.	Minor arterial	50’	PennDOT standard
3.	Major collector	50’	26’ (with curb) 24’ (without curb)
4.	Minor collector	50’	26’ (with curb) 24’ (without curb)
5.	Local	50’	22’ (with curb) 20’ (without curb)
6.	Private	50’	18’

*The cartway surface, as defined, exclusive of any curb width.

B. Minimum cartway widths, as established herein for most residential streets, are not designed to accommodate on-street parking. Additional right-of-way and cartway widths may be required by the Board for the following purposes:

1. To promote public safety and convenience.
2. To provide parking space in commercial districts and in areas of high-density residential development.
3. To accommodate special topographic circumstances which may result in cut/fill slopes extending beyond the standard right-of-way width. These should be included within the right-of-way in all circumstances to assure accessibility for maintenance operations.

C. Rights-of-way of lesser width than prescribed in this Section shall not be permitted.

D. Subdivisions abutting existing streets shall provide, for dedication, the minimum right-of-way widths for those streets in accordance with the provisions of this Section.

Section 608. Street Alignment

A. All deflection of street lines in excess of five degrees shall be connected by use of horizontal curves.

B. To insure adequate sight distance, minimum center line radii for horizontal curves shall be as follows:

1. Local streets: 150 feet.
2. Collector streets: 300 feet.
3. Arterial streets: 400 feet.

C. A tangent shall be required between curves. However, a long radius curve shall be preferred in all cases to a series of curves and tangents. In addition, compound curves may be satisfactory in some instances. Tangents of 100 feet shall be required between reverse curves.

D. Superelevation (commonly know as "banking a curve") shall be required when curve radii are less than 600 feet on arterial or collector streets.

Section 609. Street Grades

A. Centerline grades shall be not less than 1 percent.

B. Centerline grades shall not exceed 7 percent, except that a maximum grade of 10 percent on local streets may be permitted for lengths not to exceed 150 feet where natural contours provide conditions for minimal grading at the steeper grade.

C. Vertical curves shall be used at changes of grade exceeding 1 percent and shall be designed in relation to the extent of the grade change (at a rate no more abrupt than 1 percent change in grade per 25 feet along the centerline) provided that the following minimum sight distances are maintained:

1. Local streets: 200 feet.
2. Collector streets: 300 feet
3. Arterial Street: 400 feet

Vertical curves shall not produce excessive flatness in grade. There shall be no dips, cross gutter bumps, or humps in the paving.

D. Under no conditions will maximum grades be permitted with minimum curve radii.

E. Where the grade of any street at the approach to an intersection exceeds 4 percent, a leveling area shall be provided having not greater than 4 percent grades for a distance of 100 feet measured from the intersection of the centerlines of the streets. This requirement shall be modified when necessary to ensure adequate sight distance is maintained.

F. All streets shall be graded to the grades shown on the street profile and cross-section plan submitted and approved with the preliminary plan of subdivision and land development. They shall be inspected and checked for accuracy by the Township Engineer. Spot elevations may be required from the surveyor conducting the construction stake out.

Section 610. Street Intersections

A. Right angle intersections shall be used whenever practicable, always when local residential streets empty into collector or arterial streets. There shall be no intersection angle of less than 75 degrees, or more than 105 degrees, measured at the centerline.

B. No more than two streets shall cross at the same point.

C. To the fullest extent possible, intersections with arterial streets shall be located not less than 1,000 feet apart, measured from centerline to centerline. Exceptions shall be those

cases deemed to require closer spacing without endangering the public's safety, as approved by the Township Engineer.

D. Streets entering from opposite sides of another street shall either be directly across from each other or offset by at least 200 feet on local and collector and 400 feet on arterial streets, measured from centerline to centerline.

E. Corner curb radii shall be according to the following schedule of minimum lengths: local and collector streets, 25 feet; arterial streets, 35 feet. Where streets of different functional classifications intersect, the requirements for the higher classification shall hold.

F. The right-of-way line for corner curbs shall be an arc, concentric with the curb line, with a minimum radius of 20 feet, or shall be a triangle constructed by drawing the chord of an arc concentric with the curb line with a minimum radius of 15 feet.

G. Minimum paving radius of 30 feet at centerline shall be provided at all intersections. The Board of Supervisors may increase the required radii where it considers such design advisable at intersections involving arterial streets.

H. All necessary street name signs and traffic control signs shall be the responsibility of the applicant to provide and erect. The street signs shall be of the type existing in the neighborhood, shall meet PennDOT safety standards, and shall be subject to approval by the Board of Supervisors. Street signs and traffic signs and traffic control signs shall be erected before the issuance of any certificates of occupancy on that street.

I. Clear sight triangles shall be provided at all street intersections. Within such triangles, no vision-obstructing object shall be permitted which obscures vision above the height of 30 inches and below 10 feet, measured from the centerline grade of intersecting streets. Each side of the sight triangle shall be a minimum of 75 feet, measured from the point of intersection along each road centerline.

J. Intersections shall be controlled by STOP signs, except that one through street may be designated for each intersection, or by traffic signals.

K. In designing street intersections, the followings sight distance dimensions shall be used:

Posted Speed of Intersected Street	Sight Distance*
Stop condition (all streets)	75'
25 mph	175'
35 mph	300'
45 mph	450'
55 mph	600'

Measured from a point set back 15 feet from the intersected pavement edge on the street controlled by a stop sign or signal.

L. Greater sight triangle dimensions imposed by PennDOT for intersections with the State Highway System shall supersede the above.

INTERSECTION SIGHT DISTANCE

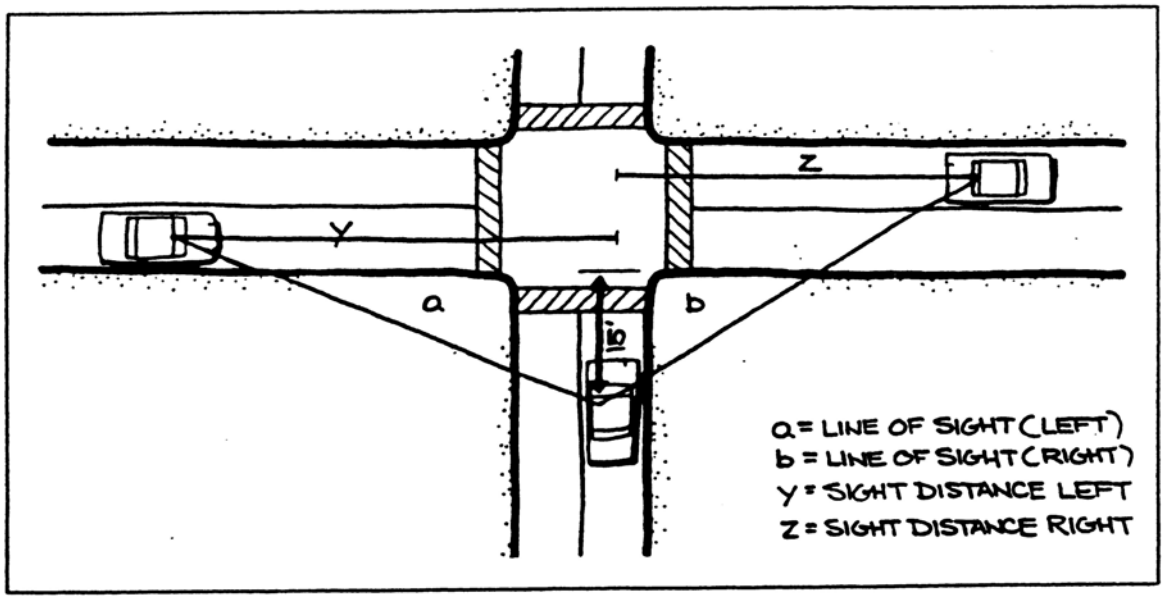

FIGURE VI-3

CLEAR SIGHT TRIANGLE

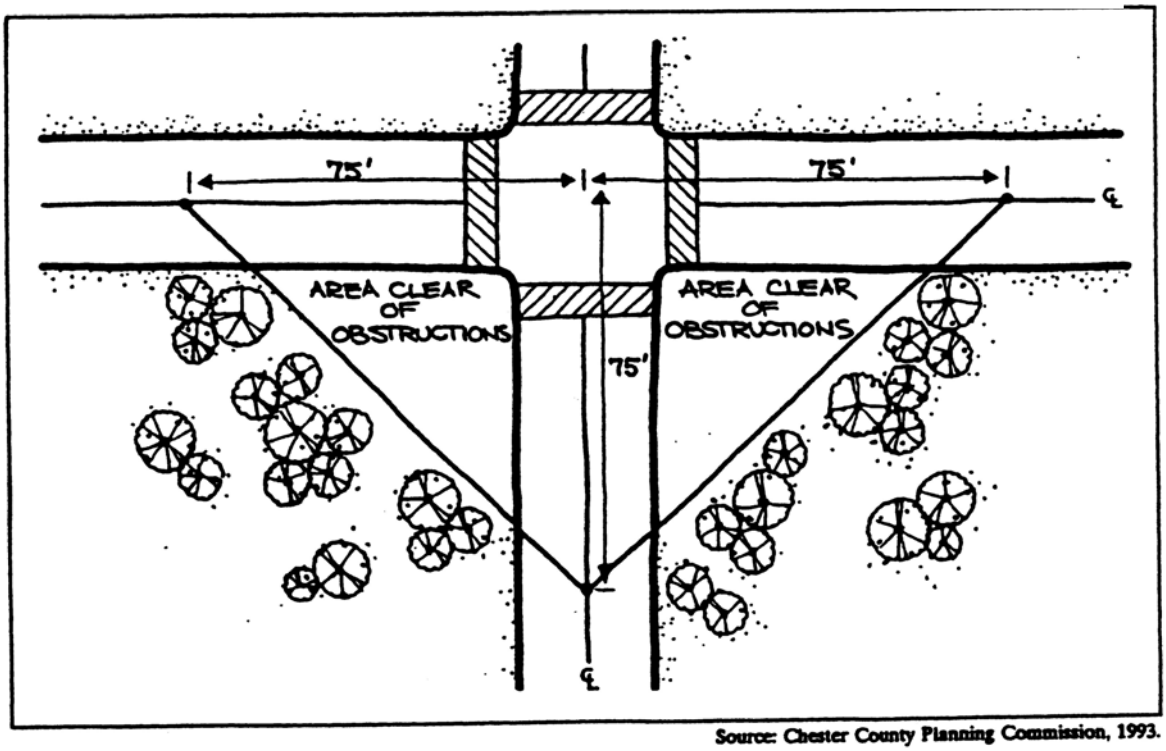

Source: Chester County Planning Commission, 1993.

FIGURE VI-4

Section 611. Acceleration, Deceleration and Turning Lanes

A. Deceleration or turning lanes may be required by the Township along existing and proposed streets whenever the Board of Supervisors feels such lanes are required to meet reasonable safety needs as determined by a traffic impact study or otherwise decided by the Board.

B. Deceleration lanes shall be designed to the following standards:

1. The lane shall have a minimum width of 12 feet or, in the case of intersections with State Highways, such width as is required by the applicable regulations and standards of PennDOT.

2. The lane shall provide the full required land width for the entire length which shall be measured from the centerline of the intersecting road. In addition, there shall be a 75 foot taper provided at the beginning of the lane so that traffic can leave the main traveled lane smoothly.

3. The minimum lane length shall be as follows:

Design Speed Of Road	Minimum Deceleration Lane Length
30 mph	165’
40 mph	275’
50 mph	300’

C. Acceleration lanes are required when the need is indicated by a recommendation of the Township Engineer. A paved taper shall be provided for right- hand turns.

ACCELERATION & DECELERATION LANES

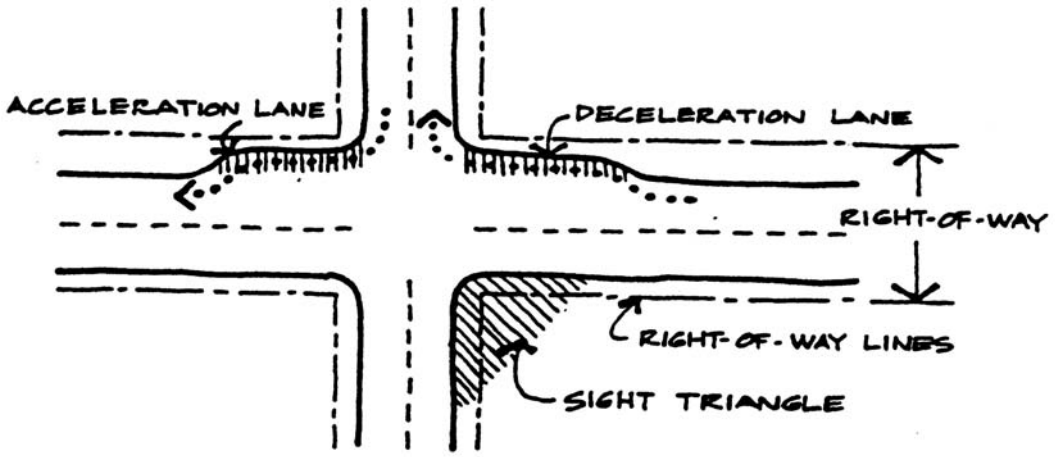

FIGURE VI-5

Section 612. Traffic Impact Study

A. The applicant for any residential subdivision or land development proposed to contain 20 or more dwelling units, or for any non-residential land development, shall prepare and submit a traffic impact study. The content of the study shall be such as to enable the Board to assess the likely impacts of the proposed development on the existing transportation network of the Township and surrounding areas. The purpose of the study is to identify any traffic problems likely to result from the proposed development in relation to ingress/egress, road capacities off-site traffic flow, public transportation, and pedestrian and other non-vehicular circulation.

B. The study shall include, but not necessarily be limited to, an analysis of expected traffic generation to, from, and upon surrounding roads within a radius of ½ - mile from the proposed development site, particularly showing AM and PM peak hours of existing traffic flow during a normal business day, in comparison with that which is anticipated after the proposed development is fully completed and, if applicable, upon the completion of each stage. Estimated peak hour trip generation shall be based on procedures established in the most recent edition of the *Trip Generation Manual* (Institute of Transportation Engineers).

C. Existing traffic flows shall be based on actual counts; if these cannot be obtained, an alternative source must be fully cited and deemed acceptable by the Township Engineer.

D. The Township shall review the methodology, assumptions, findings, and recommendations of the study. The Board, upon recommendation from the Township Engineer or a traffic consultant, may impose upon the applicant additional improvements deemed necessary to accommodate impacts of the proposed development.

Section 613. Street Construction

A. All materials entering into the construction of streets and the methods of construction and drainage shall be in accordance with the applicable requirements of the most current *PennDOT Specifications, Form 408.*

B. Subgrade

1. The area within the limits of the proposed road surface shall be shaped to conform to the line, grade, and cross-section of the proposed road.

2. All unsuitable sub grade materials shall be removed or stabilized. Specific stabilization methods shall be approved by the Township Engineer at the time of construction.

3. Encroachment into wet or swampy areas shall be minimized; where unavoidable, such areas shall be permanently drained and stabilized.

4. Fill material shall be suitable and thoroughly compacted for its full width in uniform layers of not more than 8 inch thickness prior to compaction.

5. The subgrade shall be thoroughly compacted by rolling with a minimum 10-ton vibratory roller or its equivalent and/or a sheep's foot roller over 6 tons.

6. Backfill of trenches within the cartway and curb area shall be thoroughly compacted prior to application of the base course.

7. Crown board and straight edge shall be used for checking road and street construction. Maximum deviation shall not exceed one-quarter (1/4) of an inch.

C. Base Course

1. Base course shall consist of 8 inches of 4-inch ballast (AASHTO #1) placed on a 2-inch layer of screenings (AASHTO #10) and rolled uniformly and thoroughly with the 10-ton vibratory roller or its equivalent. Rolling shall continue until the material does not creep or wave ahead of the roller wheels.

2. After compaction of the base stone, dry screenings shall be applied in sufficient quantity to fill all of the voids in the rolled stone base. A vibratory roller, of PennDOT approved design, must be used in this step of construction and rolling shall continue until all voids are filled. Small areas around inlets and manholes that cannot be reached by the vibratory roller shall be compacted with a mechanical tamper or whacker.

3. When the stone surface is tight and will accept no more screenings, all loose screenings shall be broomed from the surface to expose the top ½ inch of the aggregate over at least 75 percent of the road.

4. No base material shall be placed on a wet or frozen subgrade.

D. Bituminous Surface

1. Bituminous material shall be ID-2 or FB-1 hot mix, with 3 ½ inches of binder course and 2.0 inches of surface course after compaction.

2. The completed road surface shall have a uniform slope of ¼ inch per foot from edge to centerline, except that on super elevated curves, this slope shall not be less than ¼ inch per foot and shall extend up from the inside edge to the outside edge of the paving.

E. Grading and Shoulders

1. Supporting shoulders shall be constructed on all sections of projects where a base course or pavement is to be constructed without other permanent support along the sides.

2. Roadways shall be graded for not less than 8 feet beyond the edge of the proposed paving on each side. This grading width shall be increased as necessary where sidewalks and/or planting strips are to be provided. Shoulders shall be compacted and graded with a slope of 1 inch per foot, unless otherwise permitted in E-3, below. Beyond the limits of this grading, banks shall be sloped to prevent erosion but this slope shall not exceed two horizontal to one vertical, with tops of slope in cuts rounded.

3. The slope of one inch per foot referenced for slopes in E-2, above, will not apply in all cases of uncurbed cartways. In some cases, swales must be provided in the right-of-way area outside of the paved cartway. In such cases, cuts shall be

limited to two horizontal to one vertical and fills shall be limited to three horizontal to one vertical.

F. Alternate Road Cross Section

1. As an alternate to the typical road cross section, the applicant may elect to use the following specification (in its entirety):

   a. Base Course – 6 inches – (compacted thickness) PADOT-3A aggregate.

   b. Base Course/Binder Course – 5 inches (compacted thickness) PADOT-BCBC

   c. Wearing Course – 2 inches (compacted thickness) PADOT-ID-2 Wearing

TYPICAL ROAD CROSS SECTION

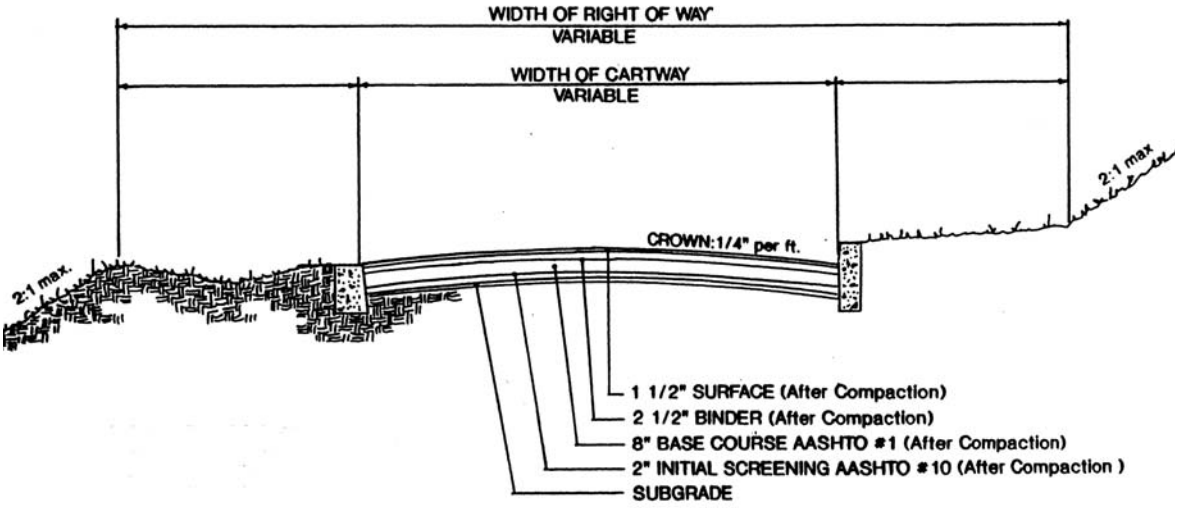

FIGURE VI-6

Section 614. Private Streets

Private streets may be permitted by the Board of Supervisors under the following circumstances:

A. There is a recorded agreement between the applicant and the Township specifying that said streets will not be offered for dedication and will not be accepted by the Township unless constructed to Township standards then existing at the time of offer of dedication. Under no circumstances, however, is the Township obligated to accept dedication.

   Unless accepted for dedication, owners, and all successors, of property which is to abut a private street shall be fully responsible for the permanent improvement of the street and for the maintenance thereof in a good and safe condition.

B. The design of private streets shall meet the standards herein applicable to the construction of streets to be dedicated except in respect to minimum cartway width, which shall be as specified in Section 607-A(6) hereof. Types of facilities, and other elements of street design shall be in accordance with the standards contained in this Ordinance.

C. Lots fronting on private streets shall meet the requirements of the Township Zoning Ordinance with regard to lot width and setbacks.

D. A private street shall be required when providing access to three, four, or five lots. A private street may serve more than 5 lots at the discretion of the Board of Supervisors.

Section 615. Driveways

A. Private driveways shall be provided, except as stated below, for all residences and the construction shall be in accordance with the regulations of this Section in order to provide safe access to Township and State roads, to eliminate problems of stormwater runoff, and to assure sufficient area for and access to off-street parking.

There may be situations in the Borough where alleys with adjacent off-street parking may be consistent with the historic development pattern of the Borough. Therefore, it shall be at the discretion of the Borough Council as to whether driveway requirements may be waived. Where alleys are proposed, driveway access shall be through the alley.

Pursuant to the findings of the Comprehensive Plan, new development in the Township in the vicinity of the Borough consistent with a more traditional town layout (utilizing alleys and adjacent off-street parking) may not require private driveways for each residence. The Board of Supervisors shall have the sole discretion to waive such requirements for new development, provided such development conforms to accepted practices of village-style design or to the official map.

B. All driveways shall contain a straight length of at least 40 feet, measured from the cartway edge of the intersecting street and extending inside the lot. The first 20 feet of this 40-foot segment adjacent to the cartway shall be paved with a base course of Pa. #3A modified stone compacted to six inches and a wearing course of ID-2 bituminous concrete compacted to a minimum thickness of two inches. In cases where common driveways are permitted, and in addition to the provisions of Subsection G, below, the portions of the driveway in common use shall be paved to a minimum distance of 20 feet from the street cartway and a minimum width of 10 feet to a point where common use of the driveway ends.

C. Within the legal right-of-way of the intersected street or for a distance of at least 25 feet from the edge of the cartway, whichever is greater, the driveway shall have a grade of 4 percent or less. The remainder of the driveway shall have a maximum grade of 15 percent, and any portion of this remainder that exceeds eight percent grade shall be limited to no more than 150 continuous feet.

D. A minimum of two parking spaces, not within the street right-of-way, shall be provided before the grade of the driveway at any point exceeds 8 percent. Such off-street parking spaces shall be of the minimum dimensions specified in the Township zoning ordinance and shall be on a grade not exceeding 8 percent.

E. Driveways to a single-family residence shall intersect streets at angles of no less than 60 degrees. All other driveways shall intersect streets at right angles, where practicable, and in no case less than 75 degrees. (The angle of intersection is the acute angle made by the intersection of the centerline of the driveway with the centerline of the road).

F. The width of a single-family dwelling driveway within the legal right-of-way of a street or when carried by a bridge shall be a minimum of 12 feet; it shall be a minimum of 10 feet at all other points within the property line. Except where the Board determines that limitations of lot size or lot configuration make it infeasible, adequate turnaround surface shall be provided on the property so egress to the street is in a forward direction.

G. A common driveway, as defined by this Ordinance, shall be of sufficient width, in the opinion of the Township Engineer, to provide safe passage of two vehicles or shall have sufficient number of pull-over areas to provide safe passage of two vehicles. Sufficient land area shall be reserved on each abutting lot for the widening of such common driveway should the need arise. Consistent with Article IV, maintenance responsibilities shall be established by easement or covenant.

H. Driveway entrances into all non-residential, single-use properties shall be no less than 20 feet in width shall not exceed 36 feet in width at the street line unless provided with a median divider, and shall be clearly defined by use of curbing. The curbs of these driveway entrances shall be rounded with a minimum radius of 15 feet where they intersect a street.

I. The edge of any driveway shall be at least 40 feet from the nearest side of the paving radius at a street intersection.

J. All new residential driveways shall provide the minimum safe stopping distance – SSSD, as defined by PA Code Title 67, Chapter 441, Form VI-1. See Figure VI-7 and VI-8.

K. The gutter line, wherever possible, shall be maintained as a paved swale. It shall have a maximum depth of four inches and a minimum width of 24 inches. A pipe may only be placed under the driveway entrances when approved by the Township Engineer. The acceptability of such a pipe will be governed by the gutter depth on each side of the driveway. The minimum pipe size under a driveway shall be 15 inch minimum RCP or equal as approved by the Township Engineer.

L. Driveways shall be graded so that, wherever possible, surface drainage will be discharged to the owner's property; otherwise, adequately sized pipes, inlets, and/or headwalls shall be installed and gutter improvements shall be made to direct surface drainage into the road drainage system and not onto the paving of the intersecting road. Detention facilities may be required upon recommendation of the Township Engineer.

DRIVEWAY SIGHT DISTANCE

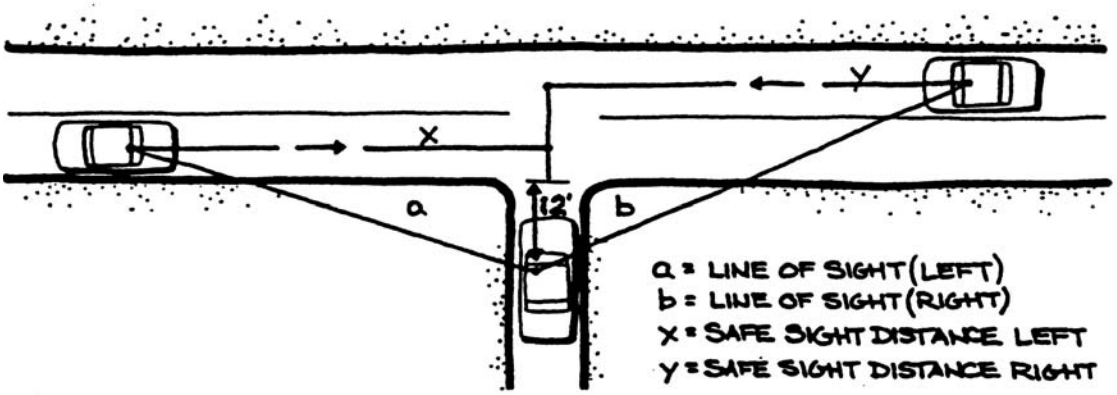

FIGURE VI-7

SINGLE FAMILY RESIDENTIAL DRIVEAY TREATMENT

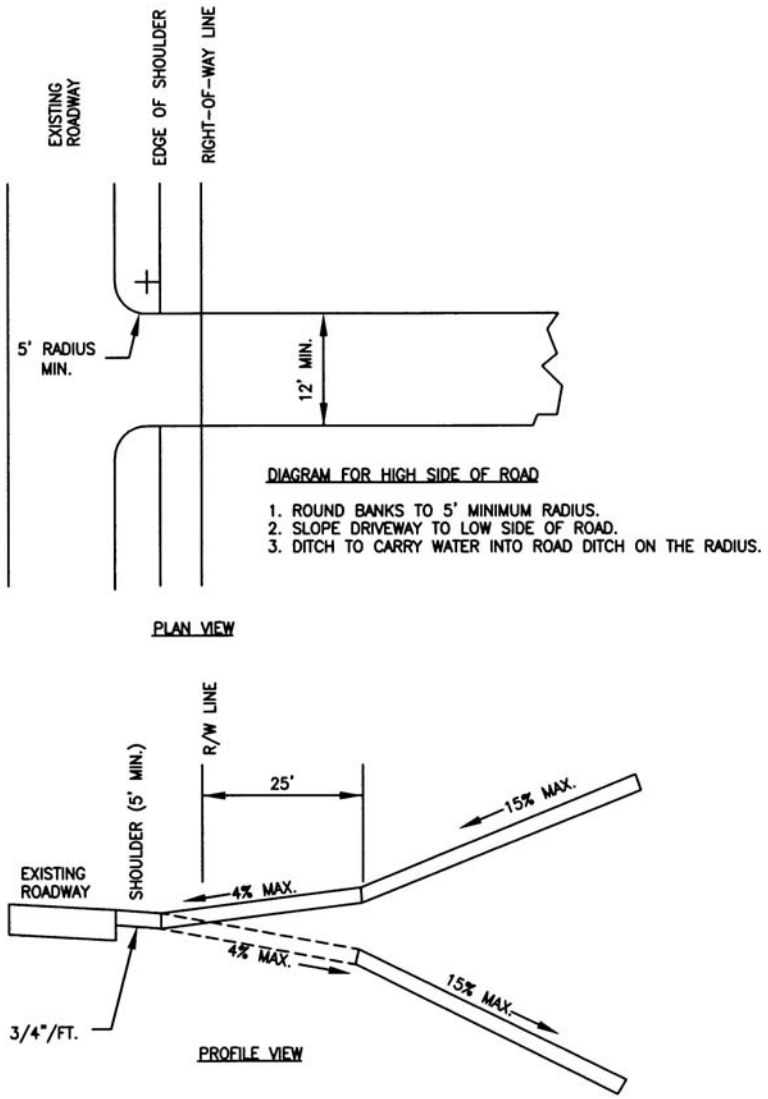

FIGURE VI-8

Section 616. Alleys and Service Streets

A. Where alleys and service streets are permitted in residential developments, they shall have a minimum right-of-way width of 25 feet and shall be curbed, where required, and paved for a width of at least 12 feet. No part of any dwelling, garage (except as noted below), or other structure may be located within 20 feet of the center line of a public alley or service street or within the applicable setback dimension prescribed in the Township Zoning Ordinance, whichever is greater. Off-street parking with or without garages, may be situated adjacent to the alley when deemed by the Township to be consistent with an approved village development plan.

B. Alleys and service streets serving commercial and industrial establishments and multi-family developments are encouraged any may be required if the Township deems it necessary. Such alleys shall have a paved cartway of at least 20 feet and right-of-way width of 30 feet. Where necessary, corners shall have a radius of 20 feet or a triangle using the chord of a 15-foot radius, cut back to permit safe use by large vehicles.

C. If it is impossible for an alley to go through a block, the alley shall be provided with a turnaround at its closed end having a radius of not less than 25 feet. The design of such shall be approved by the Township Engineer.

D. Paving shall be the same as that required for street paving. Where alleys intersect other roads, such intersections shall be consistent with the standards for road intersections.

PARALLEL ACCESS ROAD

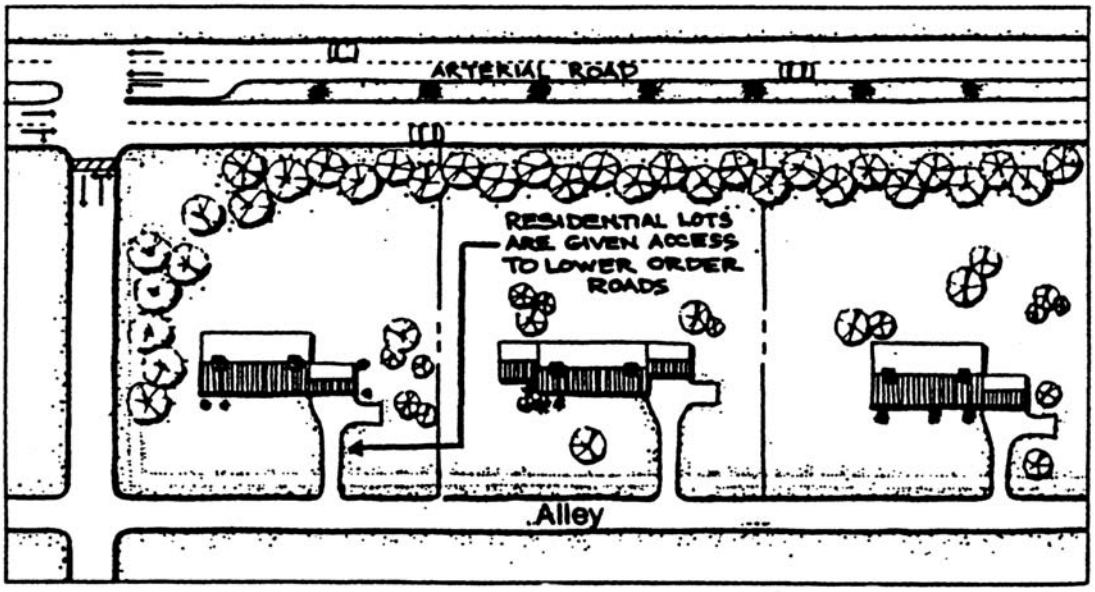

FIGURE VI-9

Section 617. Parking Areas

A. Parking facilities for motor vehicles shall be provided off street in accordance with the requirements of the Township Zoning Ordinance and the Ordinance.

B. At no time shall angle or perpendicular parking along the curbs of local public or private access roads or streets be permitted. All parking lots and bays allowing any parking other than parallel shall be physically separated from the cartway by a minimum of seven feet and confined to barrier curbing.

C. No single area for off-street parking of motor vehicles in residential areas shall exceed 36 cars in capacity. Separate parking areas on a parcel shall be physically separated from one another by 8-foot planting strips.

D. No less than 20 feet of open space shall be provided between the curb line of any parking area and the outside wall of the dwelling unit in residential areas.

E. Parking may be permitted within the minimum side and/or rear yards when the side and/or rear yards abut a district zoned industrial and/or commercial. However, no parking shall be permitted within five feet of a side or rear property line unless formal arrangements, satisfactory to the Township, have been made for the establishment of "common parking facilities."

F. In commercial and industrial districts, provision of "common parking facilities" is hereby encouraged in recognition of their increased flexibility and efficiency. Subject to formal arrangements between the proposed users of the common parking facilities, satisfactory to the Township, the Zoning Hearing Board of the Township may reduce the aggregate amount of required parking space upon determination that greater efficiency is affected by joint use of the common parking area. When common parking facilities are approved, side and/or rear yard parking requirements may be waived in order to establish unified and continuous parking area. In such cases, access drives and sidewalks shall be so aligned as to maximize parking efficiency and minimize traffic congestion. Entrances and exits must have clear sight lines and good visibility so that, both going in and coming out, drivers can see and cars can be seen.

G. Parking stall dimensions shall be not less than 10 feet in width and not less than 20 feet in depth, except as stipulated in Subsection K., below, regarding parking lots. All parking areas shall be paved with an all-weather surface.

H. Buffer planting requirements shall be applicable to parking lot facilities along the area fronting major or secondary roads and along the area adjacent to other properties.

I. All dead-end parking lots shall be designed to provide sufficient back up area for the end stalls.

J. No less than a 5-foot radius of curvature shall be permitted for all curblines in parking areas.

K. Parking lot dimensions shall be no less than those listed in the following table:

Angle of Parking	Parking Stall Depth	Parking Stall Width	Aisle Width One-Way	Aisle Width Two-Way
90	20’	10’	25’	25’
60	21’	10’	18’	20’
45	19’	10’	15’	18’

PARKING DIMENSIONAL STANDARDS

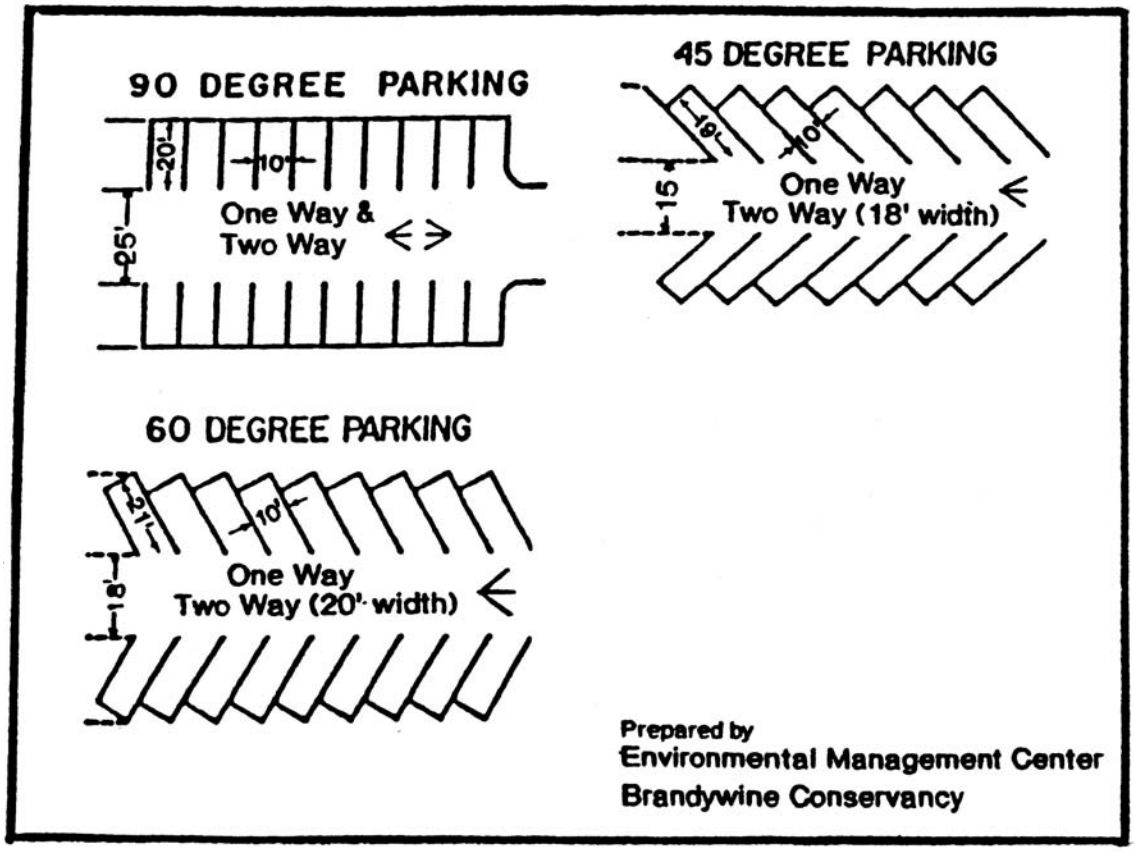

FIGURE VI-10

L. Parking areas and site accessibility for handicapped persons shall be provided in accordance with applicable federal and state standards, including in particular the Americans with Disabilities Act and the Pennsylvania Universal Accessibility Act, as each may be amended.

M. Where the requirements of the Township Zoning Ordinance with respect to parking differ from the standards of this section, the stricter standards shall apply.

Section 618. Sidewalks and Paths

A. Sidewalks generally shall be required for residential and commercial areas, except where the Board finds that they are unnecessary for public safety or convenience, such as in low-density, large-lot residential areas.

B. When provided, sidewalks shall be constructed of concrete with a minimum 28-day strength of 3000 psi, with a minimum width of four feet, and a thickness of four inches except at driveway crossings when the sidewalk thickness shall be increased to six inches with reinforcement. Certification of the driveway mix shall be furnished to the Township Engineer or other persons designated by the Board of Supervisors. Flexibility will be permitted regarding the type of forms to be used, provided the construction plan is approved by the Township Engineer. Unless otherwise approved, cement concrete sidewalks shall be constructed on a 4-inch crushed stone or gravel base to insure proper drainage; expansion joints shall be placed at least every 20 feet and between all points where the concrete sidewalk abuts a concrete curb and as otherwise required by the Township Engineer. The Board may require wider pavements in high-density areas and in commercial areas, or in other areas at their discretion. The location of sidewalks relative to planting strips shall be at the discretion of the Board.

C. At the discretion of the Board, with recommendations from the Planning Commission, a system of bicycle, equestrian, and/or pedestrian paths for public use generally unrelated to and separate from streets shall be established an secured by dedication or easement. Such paths shall be consistent with any existing plans specified by the Township, so as to encourage the formation of an interconnecting trail network both within and beyond the Township. Such paths normally shall not exceed 10 feet in width and, at the option of the applicant, shall be located adjacent to existing or proposed lot lines, or in such manner as to minimize any obstruction to the development. Existing paths may be relocated if a connection with a path on an adjoining property is thereby established.

D. To facilitate circulation, pedestrian walkways may be required to serve the interior of developments and link to outside trail networks. Such walkways shall be a minimum of four feet in width and shall be of a durable surface satisfactory to the Board of Supervisors. Where the walks are not within a street right-of-way, a separate right-of-way at least 10 feet wide shall be designated on the subdivision plan. As appropriate, the walks shall be maintained by the homeowners association (when the walks traverse common areas) or by the abutting property owners (when the walks traverse existing lots).

E. Crosswalks not less than 10 feet wide, and with concrete sidewalks not less than four feet wide, may be required where necessary to provide access to schools, churches, parks, and commercial areas. They shall be maintained by the abutting property owners in the same manner as sidewalks on public streets. All cross walks shall be designed to meet standards set forth in 28CFR Part 36, New Construction Design Standards. These standards are consistent with the Americans With Disabilities Act of 1990.

Section 619. Curbs

A. Curbs shall be provided along all new interior streets and along select existing streets, at the discretion of the Board of Supervisors. Where, in the opinion of the Board of Supervisors, curbs are unnecessary, stabilized shoulders shall be provided. Except when waived by the Board upon the recommendation of the Planning Commission in order to preserve existing trees or for other similar reasons, the ground shall be graded to a slope of ½ inch to 1 inch per foot to the right-of-way line and either seeded or sodded to such standards as shall be prescribed by the Board. In cut areas, this slope shall be toward the curb; in fill areas, it shall be away from the curb.

B. Unless constructed in accordance with Subsection C, all curbs shall be constructed of concrete in accordance with the standards and specifications, as shown below, for plain concrete curbs.

VERTICAL CURB STANDARD

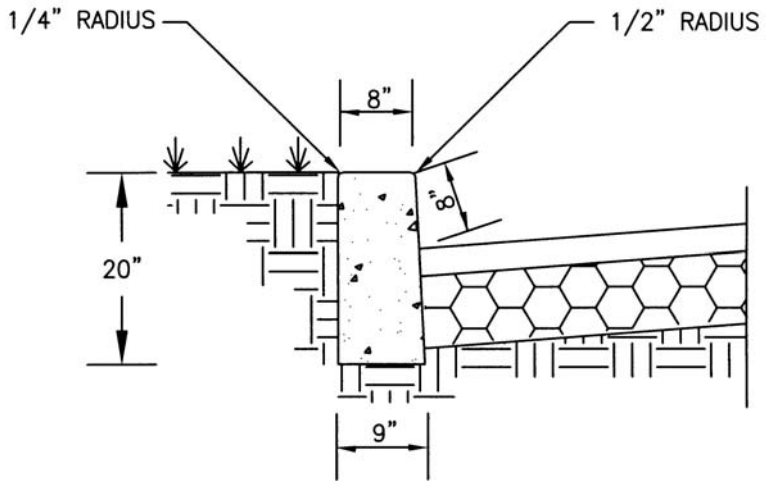

FIGURE VI-11

STANDARD ROLLED CURB

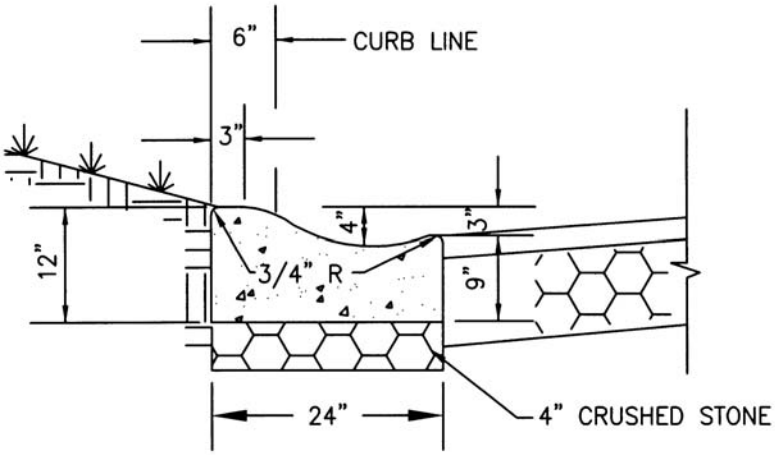

FIGURE VI-12

ROLLED CURB TRANSITION TO INLET

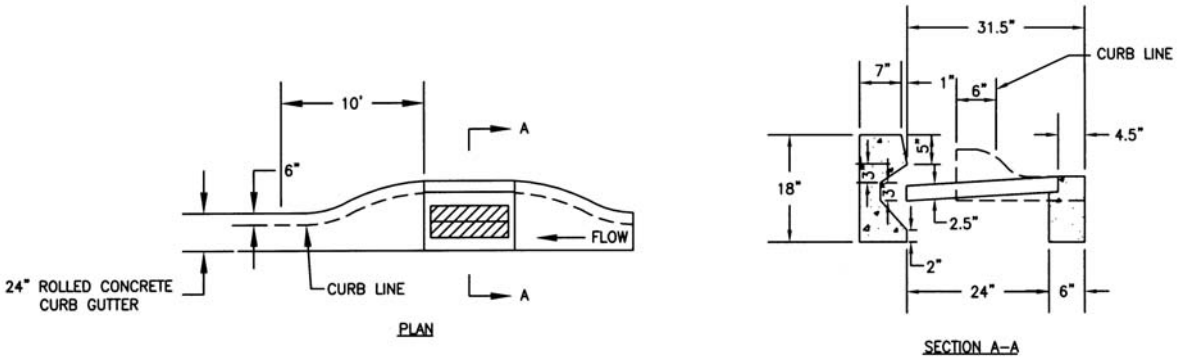

FIGURE VI-13

C. The applicant may install granite curbs, provided that their construction conforms with standards set forth in the most current *PennDOT Specifications, Form 408,* for granite curbs type A or C.

Section 620. Street Lights

A. Street lights generally shall be installed:

1. At all street intersections (installation shall be mandatory at all dead-end intersections).

2. At all other spots considered hazardous by the Township.

3. Shielding Requirements. A fully shielded fixture, where all light emitted is projected below a horizontal plane running through the lowest part of the fixture (equivalent to a total cutoff angle of less than 90 degrees), is required for all street light proposals.

4. The specifications and type of street lights shall be subject to review and approval by the Planning Commission. The architectural style of the lights shall be consistent with the nature of the development and the zoning district in which the activity is proposed.

Section 621. Monuments

A. Monuments shall be placed at such points in the perimeter boundary of the property being subdivided as may be approved by the Township Engineer on a plan to be submitted by the applicant. The Township Engineer shall be notified when the monuments have been placed in accord with the approved plan so that he may inspect the same before they are covered. At the request of the Township, the subdivider shall also stake lots before an owner or occupant moves onto the property.

B. All monuments shall be placed by a professional land surveyor so that the scored (by an indented cross or drill hole of not more than 1/4 –inch diameter in the top of the monument) point shall coincide exactly with the point of intersection of the lines being monumented.

C. The tops of monuments shall be set level with the finished grade of the surrounding ground, except;

1. Monuments which are placed within the lines of existing or proposed sidewalk shall be located (preferably beneath the sidewalks) so that their tops will not be affected by lateral movement on the sidewalks.

2. Where monuments are located beneath a sidewalk, proper access to them shall be assured.

D. All streets shall be monumented on the right-of-way lines of the street at the following locations:

1. At least one monument at each intersection.

2. At changes in direction of street lines, along one side of the street for all new interior streets. Iron pins, meeting the specifications of Section 621.E, may be used to define the right of way along existing streets.

3. At such other place along the line of streets as may be determined by the Township Engineer, so that any street may be readily defined for the future.

E. All lot corners shall be clearly identified by either a monument of an iron pin. Where iron pins are used, they shall be a minimum of ½-inch diameter solid bar or reinforcing rod, shall be a minimum of 29 inches in length, and shall be driven level with finished grade.

F. Benchmarks. The Township elevations are based on the Township Sanitary Sewer System Datum and/or the 1929 mean sea level datum. Location and elevation is available to all engineers and surveyors upon request to the Township Engineer. All contours and elevations shown on plans submitted to the Township must be based on this system.

Section 622. Sewage Treatment and Disposal

A. General Requirements

1. Sanitary sewers shall not be used to carry stormwater.

2. Where on-site sanitary sewage facilities are to be utilized, each lot so served shall be of size and shape to accommodate the necessary length of tile fields at a safe distance from, and at a lower elevation than, the proposed building(s) to facilitate gravity flow, if possible, or such system which would be in accordance with Township, County and State regulations, and shall be so plotted.

3. The proposed method of sanitary sewage disposal shall be in accordance with the Township's officially adopted Act 537 Sewage Facilities Plan.

4. All sanitary sewage facilities, whether public or private, shall be flood-proofed in accordance with PADEP and U.S. EPA requirements. At a minimum, flood-proofing shall be up to the Regulatory Flood Elevation.

5. In accordance with Title 25, Chapter 71, Subchapter C, Rules and Regulations of the Pennsylvania Department of Environmental Protection New Land Development Plan Revisions, the procedure set forth in Sections 71.51 – 71.55 of those Rules and Regulations shall be followed.

B. Northwestern Chester County Municipal Authority ("the Sewer Authority")

The service area of the Sewer Authority includes the Borough and select portions of the Township. All applicants for subdivision and/or land development within these areas shall analyze the feasibility of connecting to the Sewer Authority system. Where connection is feasible, a written approval of such shall be provided to the Township *as prepared by the Sewer Authority*. Such approval shall state that existing/proposed treatment capacity is available, the time frame for such availability, and the estimated cost to the applicant for such connection and related construction. Such report shall also verify that capacity will be available when connection to the system is anticipated and whether capacity is being reserved for connection at that time.

1. All connections shall be by way of gravity mains, where feasible, or pumping stations with such mains, laterals and other facilities which meet the design criteria of the Sewer Authority and Pennsylvania Department of Environmental Protection (PADEP).

2. Where studies by the Township indicate that construction or extension of sanitary trunk sewers to serve the property being subdivided or developed appears probable within five (5) years from the date of filing of a preliminary plan, the Township shall require the installation and capping of sanitary sewer mains and house connections, in addition to installation of temporary individual, on-site

sanitary sewage disposal systems. Individual house connections (laterals) on capped sewer systems shall extend to the right-of-way line, and shall be centered within the lot frontage. It shall be the responsibility of the applicant to consult with the Township and the Sewer Authority with regard to the sewer line locations prior to finalizing sewer design. Design of capped sewer systems shall be subject to approval by the Pennsylvania Department of Environmental Protection and the Township.

If any private sanitary sewage facility or community sewage system is proposed to provide sewage service for a subdivision or land development that cannot be connected to or serviced by the Sewer Authority within a projected five (5) year period, the design criteria referenced in C-1, shall be utilized in the design and construction of such sewage facilities.

C. Sanitary Sewage Disposal System(s) other than the Northwestern Chester County Municipal Authority System. Where connection to the Sewer Authority system is not feasible, all subdivisions or land developments shall utilize on-site sewage disposal systems or community sewage systems.

1. All lots to be provided with an on-site sanitary sewage disposal system shall meet the design standards of Title 25, Chapter 73, Rules and Regulations of the Pennsylvania Department of Environmental Protection, the Chester County Health Department standards and Township standards, or the applicant shall guarantee (by deed restriction or otherwise), as a condition of the sale of each lot or parcel within the subdivision, that such facilities can be installed by the purchaser of such lot or parcel.

   The Township shall require that a statement of suitability for any on-lot system be received from the Chester County Health Department and/or PADEP, <u>before</u> Preliminary Plan approval is granted. A note shall be required on the Preliminary and Final subdivision plan indicating that if proposed final on-lot sewage permits for each lot cannot be obtained from the Chester County Health Department and/or PADEP, then said plan shall be resubmitted to the Township depicting only lots or development for which permits can be approved.

2. In situations where the applicant shall provide a complete community sanitary sewage disposal system, the design and installation of any such systems shall be subject to the approval of the Township Engineer, and the Township Board of Supervisors. In addition, design and installation of such systems shall be subject to the approval of the Pennsylvania Department of Environmental Protection and the Chester County Health Department, as needed. Approval of such systems shall be further subject to satisfactory provisions for the maintenance thereof and shall be subject to inspection by the Township at any time. In addition, the applicant shall, prior to approval of a final plan for subdivision or land development, post a bond in a form acceptable to the Township Solicitor, in an amount sufficient to cover for a period of five (5) years the cost of maintenance, repair and hiring of personnel qualified to operate the system in the event that the system owner fails to properly maintain and operate the system within design standards. The bond shall remain in effect for the length of time the system

remains in operation. Operation of the system shall at all times be under the supervision of an operator duly licensed by the Commonwealth of Pennsylvania.

The Township reserves the right to promulgate rules and regulations for the installation, maintenance and use of such systems.

Applicants are strongly encouraged to investigate the feasibility of community systems which recharge groundwater and/or utilize treated wastewater to irrigate and fertilize a growing crop. A copy of the approval of such systems, where applicable, shall be submitted with the final plan.

D. Soil Percolation Test Requirements

1. Soil percolation tests shall be performed for subdivisions utilizing onsite sanitary sewage disposal systems to determine site suitability as required under C-1, above. Deep hole test pits are recommended as a further means of guaranteeing suitability of a site.

2. Soil percolation tests shall be made in accordance with the procedure required by the Pennsylvania Department of Environmental Protection and the County Health Department, by a Pennsylvania -Sewage Enforcement Officer.

3. The results of the soil percolation tests shall be analyzed in relation to the physical characteristics of the tract being subdivided or developed and of the general area surrounding the tract. The lot layout in the preliminary and final plan shall be based on this analysis, in accordance with B-1, above.

4. The backfilling of all percolation test holes and related test pits on the tract shall be accomplished within the time period specified in 35 P.S. §750.7(b)(8) of the Pennsylvania Sewage Facilities Act (Act 537, as amended).

Section 623. Water Supply

A. The provisions of this Section are intended to insure that:

1. Each dwelling unit and each commercial or industrial building in all subdivisions and land developments hereafter granted approval shall have an adequate supply of potable water for domestic use;

2. Where water is to be provided by means other than by private wells owned and maintained by the individual owners of lots within the subdivision or land development, the applicant shall present evidence to the Board of Supervisors that the subdivision or land development is to be supplied by a certificated public utility, a bona fide cooperative association of lot owners, or by a municipal corporation, authority, or utility; a copy of a Certificate of Public Convenience from the Pennsylvania Public Utility Commission or an application for such certificate, a cooperative agreement or a commitment or agreement to serve the area in question, whichever is appropriate, shall be acceptable evidence.

3. In each case where water is to be supplied to a subdivision or land development by means of a central water supply system, the Honey Brook Borough Authority shall provide service unless it cannot provide such service or declines to provide such service. All other such systems shall meet minimum standards controlling

water storage and production capabilities for domestic and fire use for the protection of the health, safety, and welfare of all Township citizenry affected.

B. Where the applicant proposes that individual on-site water supply systems shall be utilized within the subdivision or land development, he shall be responsible either to install such facilities or to guarantee (by deed restriction or otherwise), as a condition of the sale of each lot or parcel within the subdivision, that the facilities can be installed by the purchaser of such lot or parcel. The proposed locations of wells shall be shown on the preliminary plan for each lot; existing wells on the property or on adjoining properties, must also be shown. Isolation distances (a circular area whose radius conforms to PADEP and Chester County Health Department regulations) from on-site sewage systems, where proposed, must also be indicated on the plan. Individual water supply systems shall be designed and installed in accordance with all applicable standards of the Pennsylvania Department of Environmental Protection and the Chester County Health Department.

C. Wherever feasible, the subdivision shall be provided with a central (public or community) water supply system. The design and installation of a public system shall be subject to the approval of the Township (in addition to other regulatory bodies having jurisdiction); the design and installation of a community system shall be subject to the approval of the Pennsylvania Department of Environmental Protection, and such system shall be further subject to satisfactory provisions for the maintenance thereof. Standards and materials for the construction of any central water supply system shall meet or exceed those requirements described in the *Public Water Supply Manual of the Pennsylvania Department of Environmental Protection* and shall be subject to the approval of the Township Engineer.

1. Where a permit is required by said Department, it shall be presented as evidence of such review and approval before construction commences.

2. In accordance with the Water Code of the Delaware River Basin Commission, as amended, applicants whose proposed well (or wells) in such a system will withdraw more than an average of 10,000 gal/day over a 30-day period shall register their well(s) with the Pennsylvania DEP and, where applicable, the Chester County Health Department.

D. Each central water supply system shall be either municipally owned or under the regulations of the Pennsylvania Public Utility Commission (PUC).

E. In all subdivisions and land developments served by a central water system, the following water pressure and gallonage requirements shall apply:

1. Residential use – minimum working pressure of 30 pounds per/square inch shall be provided at each house to be connected to the water supply main. The system to which the residential unit is connected shall have sufficient capacity to supply a minimum of 300 gallons of water per residential unit per day within the subdivision or land development.

2. Commercial or industrial use – a minimum working pressure of 30 pounds per square inch shall be provided at each commercial or industrial building connected to the water supply main. When a building whishes to connect to a central water

system, a study will be made to determine if there is adequate water supply in the system to supply the building and use.

F. Wherever a public or community water system is provided, fire hydrants suitable for the coupling of equipment serving the Township shall be installed as specified by the Insurance Services Office of Pennsylvania and shall comply with local Fire Company standards. Location of hydrants shall be approved by the Township.

1. Generally, all fire hydrants will be located on an 8 inch line or al looped 6 inch line. Where a dead-end line is required to contain a fire hydrant, the portion of the line between the main loop and the hydrant shall be an 8 inch minimum diameter.

2. Fire hydrants shall be spaced in a development so that all proposed building(s) will be no more than 600 feet from the hydrant measured along traveled ways.

3. All community water systems must provide a minimum of 500 GPM at a residual pressure of 20 psi for a 2 hour period.

G. If the applicant proposes that the subdivision or land development be served by a central water supply system that demands in excess of 10,000 gallons per day, the applicant shall submit a "Proposed Public Water Supply Study" as evidence of sufficient water supply quality and quantity. The contents of this study shall include those specific items as described in the *Public Water Supply Manual of the Pennsylvania Department of Environmental Protection.* Where the water supply system occurs under the jurisdiction of the Pennsylvania Public Utility Commission, the water supply study also shall include those items of information required by the PUC.

Section 624. Other Utilities

A. All other utility lines including, but not limited to, electric, gas, street light supply, cable TV, and telephone shall be placed underground. Installation of all utilities shall be in strict accordance with the engineering standards and specifications of the Township, municipal authority, or other public utility concerned. All such underground utilities shall be put in place, connected, and approved before the streets are constructed, where such utilities lie under the proposed cartway and before any person is permitted to occupy and building to be served by such utilities. All underground electrical services located within areas proposed for municipal dedication shall be placed in conduit. The conduit specifically shall meet or exceed the requirements of the NFPA 70 National Electrical Code.

B. In accordance with the provisions of Act 1991-38 re: the Pennsylvania One Call System, Inc., any applicant shall contact all applicable utilities and accurately determine the locations and depths of all underground utilities within the boundaries of the tract proposed for development, prior to excavation. A list of the applicant's utilities and their phone numbers shall appear on the plans submitted for review, and proof of contact shall be presented in the form of the Pennsylvania One Call System serial number.

Section 625. Recreational and Open Space Land

A. In reviewing a sketch plan for subdivision or land development, the Township Planning Commission and Recreation Committee shall consider the open space and recreational needs of the additional residents and/or employees proposed by the development, and shall review the Honey Brook Joint Comprehensive Plan regarding open space and recreational facility recommendations as they may relate to the tract proposed for development. These advisory committees shall also examine the existing facilities in the immediate vicinity of the development and whether they are adequate to serve the needs of the additional dwellings. The Planning Commission shall discuss its findings and the further requirements of this Section with the applicant as it deems necessary in the public interest.

B. The Board of Supervisors shall determine its preference for the set-aside of land within the proposed development, or the payment of a fee in lieu of land, in accordance with the following:

1. In a subdivision proposed to contain 20 or more single-family detached dwellings, the general policy of the Board shall be to require that the applicant shall provide the park and recreation areas in accordance with a plan approved by the Township and generally in accordance with the schedule below:

TABLE VI-1

Gross Density of Tract (Dwelling Units per Acre)	Percentage of Total Area of Subdivision or Land Development Lot to be Reserved for Recreation Areas
Up to 1.0	10
1.01 to 2.2	15
2.21 to 5.0	20
5.01 and greater	25

Table VI-1 is not applicable when the Applicant utilizes the Conservation Design Option.

2. In a subdivision proposed to contain fewer than 20 single-family detached dwellings, the general policy of the Board shall be to require a fee in lieu of the minimum acreage otherwise required, to help the Township defray the eventual costs of providing public open space and recreational facilities to serve the residents of the community. The following fee schedule shall be utilized when fees in lieu of the dedication of open space is acceptable to the Township.

2-4 lot subdivision	$750/lot
5-10 lot subdivision	$1000/lot
11-20 lot subdivision	$2000/lot
>20 lot subdivision	$3000/lot

3. The Board shall, as it deems necessary in individual cases, modify its position with regard to the above-stated policies in order to achieve more effectively the

objectives of the Township. Specific factors to be weighted by the Board may include, among others: the recommendations of the Joint Comprehensive Plan and, in particular, its "Future Land Use and Open Space Plan" and "Recreation Plan" sections; the proximity of the tract to existing or proposed public open space areas; the age level of the prospective residents; the natural characteristics of the tract; the size of the proposed lots; and any existing commitments by the Township to purchase or improve land for recreational purposes or the further recommendations of the Township Park and Recreation Committee. The Board shall also reserve the right to revise these requirements by allowing reduced recreational facilities and/or reduced fees on a case by case basis.

C. Standards for Fees in Lieu of Land

1. Where a fee is to be contributed in lieu of the set-aside of land for open space, such fee shall be required to be paid for each new lot or dwelling unit created through subdivision or land development.

2. The amount of the fee shall be as noted in this Ordinance or adjusted by resolution by the Board of Supervisors.

3. Where a fee in lieu of land is to be paid, in accordance with the terms of this section, a note shall be placed on the final plan prepared for recording, stipulating the amount of the fee, as established by Township Ordinance or resolution, and the means and timing of payment, consistent with the terms of this section.

4. For any major subdivision, the full amount of the fee shall be placed in escrow, or otherwise secured in a manner deemed acceptable under the terms of Section 410 of this ordinance, as a condition of final plan approval by the Board. Actual payment of the fee for any lot shall be made at one of the following points, whichever shall occur first: (i) at the time of conveyance of the lot; (ii) at the time of application for a building permit; or (iii) at the time any public improvements are offered for dedication.

5. For any minor subdivision, the full amount of the fee for any lot shall be paid at the time of conveyance of the lot or upon application for a building permit, whichever shall occur first.

6. Notwithstanding the terms of Subsections (4) and (5), above, the Board of Supervisors may, as it deems appropriate in individual cases, agree to terms for the collection of the required fee at a point or points subsequent to those stipulated in the above subsections.

7. All fees received pursuant to this section shall be placed in a Special Capital Reserve Fund for Open Space, the purpose of which shall be to hold, invest, and disburse such monies. Disbursements from this fund shall be made from time to time as the shall deem appropriate, only in connection with the planning, purchase, improvement, replacement, and addition to Township lands for use as open space, conservation, recreation and education for the benefit of the citizens of the community as provided for in the Second Class Township Code, or other applicable rules, regulations, or statutes. All sums received for and deposited in the Open Space Fund shall be held, invested, and reinvested in the same manner

as other funds of the Township, but shall not be considered part of the general revenues of the Township.

D. Open Space Characteristics and Design Standards

In designating areas for open space and recreation within the subdivision or land development plan, the following criteria and standards shall be adhered to by the applicant. Areas shall be:

1. Consistent with the Honey Brook Joint Comprehensive Plan of February 1993 or its successors.

2. Suitable for active recreational uses to the extent deemed necessary by the Board, without interfering with adjacent dwelling units, parking, driveways, and roads.

3. Comprised of no more than 30 percent environmentally-sensitive lands (including flood plains, woodlands, slopes exceeding 15 percent, and surface waters).

4. Comprised of areas not less than 75 feet in width, and not less than 15,000 square feet of contiguous area, except when part of a trail system or pathway network.

5. Interconnected with common open space areas on abutting parcels wherever possible, including provisions for pedestrian pathways for general public use to create linked pathway systems within the community.

6. Provided with sufficient perimeter parking when necessary, and with safe and convenient access by adjoining street frontage or other rights-of-way or easements capable of accommodating pedestrian, bicycle, and maintenance and vehicle traffic, and containing appropriate access improvements.

7. Undivided by any public or private streets, except where necessary for proper traffic circulation, and then only upon recommendation of the Township Engineer and Planning Commission.

8. Free of all structures, except those related to outdoor recreational use. Stormwater retention or detention basins designed and approved as part of the stormwater management system for the development may be located within open space areas, but the area devoted to such facilities shall be excluded from the calculation of the amount of such open space.

9. Suitably landscaped either by retaining existing natural cover and wooded areas and/or by a landscaping plan for enhancing open space areas through plantings which are consistent with the purposes of this Section and which minimize maintenance costs.

10. Made subject to such agreement with the Township and such deed restrictions duly recorded in the office of the County Recorder of Deeds as may be required by the Board for the purpose of preserving the common open space for such use.

E. Provisions for Recreational Facilities within the Open Space areas

The developer shall provide open space as required by this Ordinance and install, as a minimum, the following recreational facilities on the park and recreational area(s) or, in place of these, any other similar facilities which have been set aside for recreational

purposes or fees, as deemed appropriate by the Board of Supervisors, after consulting with the Planning Commission and/or Recreation Committee.

FOR SINGLE-FAMILY PROPOSALS

Dwelling Units	Tot Lots	Tennis Courts	Basketball Courts	Multi Purpose field a minimum of 80x120(YDS)
Fewer than 30	1	Combination		--
31 to 60	2	Combination		--
61 to 90	2	1	1	1
91 to 120	3	2	1	1
121 to 150	3	3	2	1
	Plus 1 for	Plus 2 for	Plus 1 for	Plus 1
	Every 100	Every 100	Every 100	For every
	Units or	Units or	Units or	100 units
	Fraction	Fraction	Fraction	Or fraction
	Thereof	Thereof	Thereof	Thereof
	Over 150	Over 150	Over 150	Over 150

FOR MULTIFAMILY PROPOSALS
(Apartments, Condominiums, Etc.)

Dwelling Units	Tot Lots	Tennis Courts	Basketball Courts	Multi-Purpose Fields
Up to 30	1	--	--	--
31 to 60	2	1	½	--
61 to 90	2	2	1	1
91 to 120	3	3	1	1
121 to 150	4	3	1 ½	1
	Plus 3 for	Plus 2 for	Plus 1 for	Plus 1
	Every 100	Every 100	Every 100	For every
	Units or	Units or	Units or	100 units
	Fraction	Fraction	Fraction	Or fraction
	Thereof	Thereof	Thereof	Thereof
	Over 150	Over 150	Over 150	Over 150

1. The developer shall provide the following within a tot-lot area: play apparatus, benches, spray pools and/or wading pools, waste receptacles and drinking fountains or, in place of these, any other similar facilities, as deemed appropriate by the Board of Supervisors, after consulting with the Planning Commission and/or Recreation Committee.

2. The developer and the Board of Supervisors, after consulting with the Planning Commission or Recreation Committee, shall review the entire park and

recreational area(s) for possible inclusion of passive recreational uses, such as picnic facilities, walking trails, bicycle paths and landscaped areas.

F. Ownership of Common Open Space and Facilities

1. The terms and arrangements for ownership of any open space created under the requirements of this section shall be consistent with the provisions of this subsection. The specific arrangement for a particular tract shall be established, to the satisfaction of the Board, at the time of final plan approval and incorporated into the terms of the development agreement.

2. The following methods may be used, either individually or in combination, to preserve, own, and maintain common facilities: condominium, homeowners' association, dedication in fee simple, easements and transfer to a private conservation organization. Such land or facilities shall not be eligible for transfer to another party except for transfer to another method of ownership permitted under this subsection, and then only where there is no change in the common facilities. The following specific requirements are associated with each of the various methods:

a. Condominium. Common facilities may be controlled through the use of condominium agreements. Such agreements shall be in conformance with the Pa. Uniform Condominium Act of 1980, as amended.

b. Fee Simple Dedication. The Township, or other public agency acceptable to the Township, may, but shall not be required to, accept any portion or portions of the common facilities, provided:

[1]. Any common facilities so dedicated are accessible to the residents of the Township;

[2]. There is no cost of acquisition (other than any costs incidental to the transfer of ownership, such as title insurance);

[3]. The Township, or other public agency acceptable to the Township agrees to and has access to maintain such common facilities.

c. Dedication of Easements. The Township may, but shall not be required to, accept easements for public use of any portion or portions of the common facilities, title of which is to remain in ownership by the developer, or by the condominium or homeowners' association, provided:

[1]. Any common facilities so dedicated are accessible to the residents of the Township;

[2]. There is no cost of easement acquisition (other than any costs incidental to the transfer of ownership, such as title insurance);

[3]. A satisfactory maintenance agreement is reached between the owner and the Township.

d. Transfer of Easements to a Private Conservation Organization – With permission of the Township, any owner may transfer easements on open

space lands to a private, non-profit organization, among whose purposes is to conserve open space land and/or natural resources, provided that:

[1]. The organization is acceptable to the Township, and is a bona fide conservation organization, with perpetual existence;

[2]. The conveyance contains appropriate provisions for proper reverter or retransfer in the event that the organization becomes unwilling or unable to continue carrying out its functions;

[3]. A maintenance arrangement acceptable to the Township is established between the owner and the grantee.

e. Homeowners' Association – The common facilities may be held in common ownership by a homeowners' association. This method shall be subject to all of the provisions for homeowners' associations set forth herein. In addition, if a homeowners' association is formed, it shall be governed according to the following regulations:

[1]. The owner or applicant proposing to establish a homeowners' association shall provide to the Township a description of the organization, including its by-laws and documents governing maintenance requirements and use restrictions for common facilities.

[2]. The organization shall be established by the owner or applicant and shall be operating (with financial subsidization by the owner or applicant, if necessary) before the sale of any dwelling units within the development.

[3]. Membership in the organization is mandatory for all purchasers of dwelling units therein and their successors.

[4]. The organization shall be responsible for maintenance of and insurance on common facilities.

[5]. The organization shall be responsible to pay all applicable real estate taxes on common facilities only where the following preferred alternative is not utilized: The owner or applicant for any tract proposed to contain any common facilities shall arrange with the Chester County Board of Assessment a method of assessment of the common facilities which will allocate to each tax parcel in the development a share of the total assessment for such common facilities. Where this alternative is to be utilized, the method of allocation shall be approved by the Board of Supervisors.

[6]. The members of the organization shall share equitably the costs of maintaining, insuring and operating common facilities, and of developing additional common facilities, if any, in accordance with the procedures established by them.

[7]. In the event of any proposed transfer of common facilities by the homeowners' association or of the assumption of maintenance of common facilities by the Township as hereinafter provided, notice of such action shall be given to all members of the homeowners' association by said association.

[8]. The organization shall have or hire adequate staff, as necessary, to administer, maintain and operate common facilities.

[9]. The homeowners' association may lease back open space lands to the developer, his heirs or assigns, or to any other person or corporation qualified to manage open space for operation and maintenance of open space lands, but such lease agreement shall provide: (i) that the common open space to be leased shall be maintained for the purposes set forth in this ordinance; and (ii) that the operation of open space facilities may be for the benefit of the residents of the development only or may be open to the residents of the Township. The lease shall be subject to the approval of the Township, as shall any transfer of assignment of the lease. Lease agreements so entered upon shall be recorded with the Recorder of Deeds of Chester County within 30 days of their execution and a copy of the recorded lease shall be filed with the Township.

3. At the time ownership of the open space is to be transferred from the developer, the natural and/or developed characteristics of that open space shall be as stipulated under the terms of the approved plan. No such transfer shall occur until the receiving party is satisfied that such terms have been met. No construction waste shall be buried or otherwise disposed within the open space.

G. Maintenance and Operation of Common Open Space and Facilities

1. The applicant for any development proposed to contain common open space and/or facilities shall, where applicable, provide to the Township, at the time of preliminary plan submission, a plan for maintenance and operation of such open space and/or facilities. Said plan shall:

a. define ownership;

b. establish necessary regular and periodic maintenance responsibilities;

c. estimate staffing needs, insurance requirements, and associated costs, and define the means for funding same on an ongoing basis.

2. In the event that the organization established to own and maintain common facilities, or any successor organization, shall, at any time after establishment of the common facilities or the use attendant thereto, fail to maintain all or any portion of the aforesaid in reasonable order and condition in accordance with the development plan and all applicable laws, rules and regulations, the Township may serve written notice upon such organization or upon the residents and owners of the uses relating thereto, setting forth the manner in which the organization has failed to maintain the aforesaid common facilities in reasonable condition, and said notice shall include a demand that such deficiencies of maintenance be cured

within 30 days thereof, and shall state the date and place of a hearing thereon which shall be held within 14 days of the notice. At such hearing the Township may modify the terms of the original notice as to the deficiencies and may give an extension of time within which said deficiencies shall be corrected. If the deficiencies set forth in the original notice or in the modifications thereof shall not be corrected within the said 30 days or any extension thereof, the Township, in order to preserve the taxable values of the premises and to prevent the common facilities from becoming a public nuisance, may enter upon the same and maintain the same for a period of one year. Said entry and maintenance shall not constitute a taking of said common facilities and shall not vest in the public any rights to use the common facilities except when the same is voluntarily dedicated to the public by the residents and owners and such dedication is acceptable to the Township. Before the expiration of said year, the Township shall, upon its initiative or upon the request of the organization theretofore responsible for the maintenance of said common facilities, call a public hearing upon notice to said organization, or to the residents and owners of the dwelling units attendant thereto, at which hearing such organization or the residents and owners of the aforesaid dwelling units shall show cause why such maintenance by the Township shall not, at the election of the Township, continue for a succeeding year. If the Township shall determine that such organization is ready and able to maintain said common facilities, the Township shall cease to maintain said common facilities at the end of said year. If the aforesaid are not ready and able to maintain said common facilities in a reasonable condition, the Township may, in its discretion, continue to maintain said common facilities during the next succeeding year and subject to a similar hearing and determination in such year thereafter. The decision of the Township in any such case shall constitute a final administrative decision subject to judicial review.

3. The cost of such maintenance and enforcement proceedings by the Township shall be assessed ratably, in accordance with the tax assessments, against the properties that have the right of enjoyment of the common facilities and shall become a lien on said properties. The Township, at the time of entering upon such common facilities for the purpose of maintenance, shall file a notice of such lien in the office of the Prothonotary of Chester County, upon the properties affected by such lien.

Section 626. Easements, Rights-of-way, Reserve Strips

A. Where water and/or sewer facilities are intended for dedication, the requirements for easement shall be determined by the Board of Supervisors. Easements shall be similarly established as necessary for other utilities and for road construction and maintenance.

1. Except for driveways serving single-family or two-family dwellings, nothing shall be permitted to be placed, planted, set, or put within the area of an easement. The area shall be kept as lawn or, where necessary, as vegetative buffer.

2. The owner of any lot, upon written request from the Township, and at the owner's sole expense, shall remove anything placed, planted, set or put (with or without knowledge of this regulation) within the area of any easement.

3. To the fullest extent possible, such easements shall be adjacent to lot lines.

4. The required minimum setback and yard dimensions for any lot shall be measured from the lot line, except where the Board of Supervisors makes a specific determination that such dimension shall be measured from the edge of an easement.

B. Storm drainage easements shall be provided as required by Section 627 of this ordinance.

C. The Board of Supervisors may require easements as prerequisites to the approval of common driveways or other access arrangements, or as a condition of approval of the creation of areas of common open space.

D. No right-of-way or easement for any purpose whatsoever shall be recited or described in any deed unless the same has been shown on the approved plan. Any such error found in a deed shall be immediately corrected and re-recorded in the Chester County Recorder of Deeds office, at the sole expense of the subdivider.

E. Reserve strips, to control access to streets, alleys, subdivisions, or adjacent areas, are prohibited.

Section 627. Stormwater Management

A. The intent of this Section is to regulate stormwater runoff, erosion, and sedimentation, to protect and preserve surface and groundwaters of the Township and to protect the health, safety, and general welfare of the Township citizenry. Specifically, the objectives are:

1. To maintain or improve year-round flows and water quality in all streams and water courses of the Township.

2. To control runoff, erosion and sedimentation through measures that are on-site or situated as close as possible to where stormwater falls on the land.

3. To maximize recharge of groundwater and encourage storage of rainfall to sustain groundwater supplies and stream flows.

4. To limit the use of stormwater structures which will present maintenance problems.

5. To restrict the encroachment of stormwater management structures and facilities into existing wetland areas.

6. To meet the requirements of the National Pollutant Discharge Elimination System (NPDES) where applicable.

7. To meet the requirements of the Pennsylvania Stormwater Management Act (Act of October 4, 1978, C.P. 864, No. 167, 32 P.S. and as amended by Act of May 24, 1984, No. 63).

8. To meet the Pennsylvania Department of Environmental Resources' requirements of Chapter 102 as expressed in the Erosion and Sediment Pollution Control Manual of 1970, as amended.

B. The management of stormwater on the site, both during and upon completion of the disturbances associated with the proposed subdivision or land development, shall be

accomplished in accordance with the standards and criteria of this Section. The design of any temporary or permanent facilities and structures and the utilization of any natural drainage systems shall be in full compliance with these terms and the interpretations of the Township. At the time of application for a building permit for any approved lot created by a subdivision under the terms of this Ordinance, issuance of the permit shall be conditioned upon adherence to the terms of this section.

C. In order to prevent accelerated erosion and resulting sedimentation, land disturbance activities relating to an approved subdivision or land development shall be conducted only in conformity with the following principle: There shall be no discharge of sediment or other solid materials from the site as a result of stormwater runoff.

1. Erosion and sedimentation devices such as temporary vegation/mulch, temporary detention basins, diversion terraces, rock filter berms, or silt fences (in areas of minimum flows) appropriate to the scale of operations shall be installed concurrent with earthmoving activities and whenever a situation is created which would contribute to increased erosion.

2. Earthmoving, stripping of vegetation, and the addition of fill shall be minimized where possible and practicable to preserve desirable natural features and the topography of the site. Changes in grade and topography and other earthmoving shall be in accordance with the terms of Section 628 of this Ordinance.

3. Stripping of vegetation, regarding, or other earth disturbance or development shall be done in such a way that will minimize erosion.

4. Land disturbances shall be limited to the actual construction site and an access strip. The amount of disturbed area and the duration of exposure shall be kept to a practical minimum. Stockpiling of earth/top soil for later use on the project shall be stabilized and protected as stated under Subsection C-2, above.

5. The permanent (final) vegetative and structural erosion control and drainage measures shall be installed as approved by the Township.

6. Sediment in runoff water shall be trapped and removed through means approved by the Chester County Conservation District, when and where applicable, or by the Township Engineer to assure adequate capacity in the basins or traps.

7. Procedures for protecting soils or geologic structures with water supply potential from contamination by surface water, or other disruption by construction activity, shall be situationally dependant and established by the Township.

D. Permanent Stormwater Management Standards. Stormwater controls shall be designed and constructed to provide groundwater recharge, water quality treatment, and peak flow attenuation in conformance with the following:

1. Peak Flow Attenuation. In addition to compliance with the recharge and water quality requirements, peak flow from the proposed development shall be attenuated consistent with the following requirements:

a. After installation of post-development impervious cover, peak discharges from the site for all storms up to a 10-year, 24-hour storm of 5.0 inches of rainfall shall not exceed the pre-development disturbance peak discharge

rate from a 2-year, 24-hour storm of 3.2 inches of rainfall. Peak discharges for any storms of greater than 10-year frequency up to and including a 100-year storm shall not exceed the pre-development peak discharges from the site of the same storms before disturbance, that is:

[1]. a 25-year, 24-hour storm of 5.6 inches of rainfall;

[2]. a 50-year, 24-hour storm of 6.3 inches of rainfall;

[3]. a 100-year, 24-hour storm of 7.2 inches of rainfall.

b. The design criteria and standards of this subsection may be modified by the Board, upon a written recommendation from the Township Engineer, where the applicant proposes to collect and dispose of stormwater by means of subsurface system.

c. In establishing the antecedent conditions for calculating runoff prior to land disturbance, the following assumptions shall apply:

(1) Average antecedent moisture conditions;

(2) A type II distribution storm;

(3) Woodland shall be used as the pre-development cover condition for those portions of the site having trees of greater than six inches dbh or where such trees existed within three years of application;

(4) Meadow shall be used as the pre-development cover condition for all other areas, including areas which are under cultivation and areas of existing impervious surface.

d. Any method approved by the Pennsylvania Departments of Transportation and/or Environmental Protection may be used to design the waterway areas of bridges.

e. Under certain conditions, the Township, upon recommendation by the Township Engineer, may impose the following additional restrictions on stormwater discharges:

(1) Peak discharge rates on storms in excess of the 10-year storm may be further restricted when it can be shown that a probable risk to downstream structures or unique natural areas exists or that an existing flooding problem would be further aggravated.

(2) Measures may be imposed to protect against groundwater or surface water pollution where the type of business or the nature of the soils underlying a runoff structure would constitute a substantial risk of contamination.

f. All plans and designs for stormwater management systems and facilities submitted to the Township Engineer for approval shall determine stormwater peak discharge and runoff by the use of the Soil Cover Complex Method as set forth in Urban Hydrology for Small Watersheds, Technical Release No. 55, with specific attention given to antecedent

moisture conditions, flood routing, and peak discharge specifications included therein and in Hydrology National Engineering Handbook, Section 4, both by U.S. Department of Agriculture, Soil Conversation Service. The Township Engineer, however, may permit the use of the Modified Rational Method or other method acceptable to the reviewing engineer for calculation of runoff on land developments of 10 acres or less and for the design of all storm sewers, inlets and swales.

g. In order to improve the quality and general utility of stormwater management plans, subdivision and land development and building construction shall be planned, designed and constructed in conformance with the following principles:

(1) Erosion and sedimentation control and stormwater management control facilities for subdivisions containing two or more lots shall utilize a common stormwater management detention facility, except the Township, upon recommendation by the Township Engineer, may authorize individual, on-lot stormwater management detention facilities which comply with subsection 627.I

(2) Erosion and sediment control and stormwater management control facilities shall be incorporated into all building site designs and the overall design of any subdivision or land development or improvement in such ways that they may serve multiple purpose such as wildlife areas, recreational areas, fire prevention ponds, etc., where practical.

(3) The natural infiltration and water resource potentials shall guide design, construction and vegetation decisions. Runoff in excess of natural conditions from roofs and other surfaces which are unlikely to contain pollutants shall be recharged to the groundwater table or stored for non-potable water uses to the maximum extent possible.

(4) All natural streams, channels, drainage swales, and areas of surface water concentration shall be maintained in their existing condition except where changes can be justified to the satisfaction of the Township.

(5) Erosion and sediment control and stormwater management control facilities shall not be constructed in a manner which results in an encroachment into existing wetlands areas.

2. Recharge Requirement. In order to preserve pre-development levels of groundwater recharge and minimize the increased volumes of stormwater discharging into local streams, structural best management practices shall be implemented on-site consistent with the following:

Structural best management practices including, but not limited to, permeable pavement, and infiltration trenches or beds shall be used to maximize groundwater recharge and mitigate for the increased volumes of stormwater

caused by land disturbance, and the creation of impervious surface. The design volume required to be provided by the recharge system shall be equal to the difference between the pre- and post development runoff volume generated by a two (2) year frequency, 24 hour rainfall event (3.2 inches)

Recharge Alternative. The Board of Supervisors may determine, upon recommendation of the Township Engineer, that use of structural best management practices to satisfy the recharge requirement is not possible due to site configuration, existing soil, bedrock, water table, or other site conditions. In place of the recharge requirement the peak rate standards of Section 627.D.1, above, shall be modified so that the post-development peak rate of discharge from the site must be equal to or less than 75 percent of the pre-development peak rate for all storms up to and including the 50-year storm.

3. Water Quality Requirement. In order to reduce the water quality impacts of stormwater on receiving streams, non-structural (vegetative) best management practices and dry basin discharge controls shall be utilized on-site consistent with the following:

Non-structural (vegetated) best management practices, including but not limited to bioretention areas, filter strips, grassed swales, and stream buffers, shall be used to mitigate the impacts of stormwater from impervious areas on water quality.

> Based upon the total site area and the underlying hydrologic soil grouping, the following formula shall be used to determine the minimum percentage of <u>impervious area</u> to be directed to and/or drained by non-structural best management practices:

Percent Area = (A * 38) + (B * 25) + (C * 13) + (D * 6)
where

A = percentage of site underlain by hydrologic soil group "A"
B = percentage of site underlain by hydrologic soil group "B"
C = percentage of site underlain by hydrologic soil group "C"
D = percentage of site underlain by hydrologic soil group "D"

Example: Existing 15 acre parcel with 40 percent of the site underlain by "B" soils, 20 percent underlain by "C" soils, and 20 percent of the site underlain by "D" soils.

*Percent Area = (0 * 38) + (0.40 * 25) + (0.20 * 13) + (0.40 * 6) = 15*

Therefore a minimum of 15 percent of the site's proposed impervious area shall be directed to and/or drained by non-structural best management practices.

4. In addition to the requirements listed in Section 627.D.3, any site proposing Regulated Earth Disturbances (as defined) within the Township and all stormwater runoff entering into the Township's separate storm sewer system from lands within the boundaries of the Township must comply with the Honey Brook Township MS-4 Stormwater Management Ordinance.

5. Storm sewers, culverts, bridges, and related installations shall be provided:

   a. To permit unimpeded flow of natural watercourses. Such flow may be redirected as required, subject to the approval of the Department of

Environmental Protection.

b. To insure adequate drainage of all low points along the line of streets.

c. To intercept stormwater runoff along streets at intervals reasonably related to the extent and grade of the area drained, and to prevent substantial flow of water across intersections during storms up to and including a 10-year frequency.

d. To insure adequate and unimpeded flow of stormwater under driveways in, near, or across natural watercourses or drainage swales. Suitable pipes or other waterway openings shall be provided as necessary.

E. Design of storm sewers and related installations:

1. Storm sewers, as required, shall be placed under or immediately at the back of the shoulder, when parallel to the street within the right-of-way. When located in undedicated land, they shall be placed within an easement not less than 20 feet wide as approved by the Township Engineer. Unstabilized ditches shall be avoided. Properly designed, graded, and turfed drainage swales shall be permitted in lieu of storm sewers where approved by the Township Engineer.

2. Where a subdivision is traversed by a watercourse, a drainage easement or right-of-way conforming substantially with the line of such watercourse and of such width as will be adequate to preserve natural drainage and provide sufficient width for maintenance may be required. All storm sewers or drainage swales shall discharge to a detention or retention basin for the control of peak runoff discharge except as approved by the Township Engineer.

3. Storm sewers shall have a minimum diameter of 15 inches for reinforced concrete pipe with a minimum grade of one-half percent (1/2%). Other pipe material commonly in use and acceptable to the Township Engineer also may be used. Changes in alignment shall be by straight sections connected by inlets of manholes. Storm sewer sizes shall be selected in accordance with storm intensity frequency of the 50-year frequency storm.

4. Rainfall intensity curves and other hydraulic design data, provided by the Pennsylvania Department of Transportation and/or Soil Conservation Service, shall be used for design purposes.

5. Manholes shall be not more than 300 feet apart on sizes up to 24 inches, and not more than 450 feet apart on greater sizes. Inlets may be substituted for manholes on approval by the Township Engineer.

6. Inlets, manholes, covers, and frames shall conform to Pennsylvania Department of Transportation specifications. At street intersections, inlets shall be placed in the tangent and not in the curved portion of the curbing.

7. When precast concrete inlets or manholes are used, a minimum of two courses of brick masonry or grade ring shall be placed to bring the grate or cover to proper elevation.

F. Bridges and culverts shall have ample waterway to carry expected flows, based on a minimum storm frequency of 25 years. Bridge and/or culvert construction shall be in accordance with the Pennsylvania Department of Transportation specifications and shall meet the requirements of the Department of Environmental Resources. Culverts shall be provided with wing walls and constructed for the full width of the right-of-way. The cartway area over the bridge shall be 24 inches wider, on either side, than the road connecting with the bridge, or if the character of the road is expected to change for future planning, the cartway of the bridge shall be made to anticipate this condition. On either side of the bridge cartway, the bridge railing must be set back from the edge of the final cartway a minimum of 8 feet and this area may be used to place sidewalks, present or future.

G. Stormwater management basins for the control of stormwater peak discharges shall meet the following requirements:

1. Dry Basins shall be naturalized consistent with the following minimum design standards:

   a. Minimum grades inside the basin shall be 2 percent, and the maximum side slopes shall be 25 percent (4 units horizontal to 1 unit vertical).

   b. Inlet structures and outlet structures shall be separated to the greatest extent possible in order to maximize the flow path through the basin.

   c. Basins shall be landscaped in accordance with the requirements of Section 629.

2. Inlet Structures. The invert of the inlet pipe into a basin shall be six (6) inches above the basin floor or lining so that the pipe can adequately drain after rain storms. Inlets shall discharge into areas of the basin that slope toward the outlet structure. Inlet and outlet structures shall be located at a maximum distance from each other in order to promote water quality benefits. The Township Engineer may require a rock filter, rock filled gabion, or baffles for entrapping sediments carried in stormwater if sufficient separation of inlet and outlet structure cannot be achieved.

3. Outlet Structures. To minimize clogging and to facilitate cleaning, outlet pipes shall have an internal diameter of at least eighteen (18) inches and a minimum grade of one (1) percent. Anti-seep collars shall be located on all outlet pipes. All principal outlet structures shall be built with reinforced concrete with watertight construction joints. The developer should consider the use of architecturally treated concrete, stucco, painted surface or stone facade treatment for enhancing the outlet structure. Outlet pipes shall be constructed of reinforced concrete with rubber gaskets in conformance with AASHTO M170, M198 and M207. Child-proof trash racks or anti-vortex devices should be constructed at all outlets and designed to facilitate cleaning and avoid clogging caused by debris.

4. Emergency spillways shall be sized and located to permit the safe passage of stormwater flows from a 100 year storm. The maximum velocities in vegetated spillways excavated in undisturbed soil shall be checked based upon the velocity of peak flow in the emergency spillway during an assumed clogged primary outlet

condition. Where maximum velocities exceed design standards contained in the Engineering Field Manual for Conservation Practices, (U.S Natural Resource Conservation Service) suitable lining shall be provided. All emergency spillways placed on fill materials shall be lined. Lining for emergency spillways shall incorporate native colors and materials where possible including mono slab revetments, grass pavers and native stone.

5. Freeboard. Freeboard is the difference between the design flow elevations in the emergency spillway and the top of the settled basin embankment. The minimum freeboard shall be 6 inches assuming a blocked condition over all other outlet structures.

6. Energy Dissipators. Devices to dissipate or spread stormwater flow shall be installed at points where pipes or drainageways drain into or from a basin. Energy dissipators shall comply with criteria in and the requirements of PA Title25, Chapter 102 and the Pennsyvlania Erosion and Sediment Pollution Manual as amended. Native rock should be used in constructing dissipators where practical.

7. Stabilization. Proper stabilization structures including: stilling basins, energy dissipators, and channel lining shall be constructed at the outlets of all basins and emergency spillways. The stabilization structures should control water to: avoid erosion, reduce velocities of released water and direct water so that it does not interfere with downstream activities.

8. Discharge Points. The minimum distance between a proposed basin discharge point and a downstream property boundary shall be 50 feet. The setback distance may be adjusted at the discretion of the Township Engineer based upon factors such as flow rate, topography, soil conditions, and the location of structures.

9. Energy dissipators and/or level spreaders shall be installed to prevent erosion and/or initiate sheet flow at points where pipes or drainage ways discharge to or from basins.

H. Design of Seepage Pits and Trenches for Infiltration of Runoff

1. Seepage pits and trenches shall be designed to control the runoff from a 100-year storm in all subdivision or land developments where they are used as the only method of stormwater management. Peak discharge rates shall be designed to comply with the limits set forth in Section D-1, above. Where land development and the runoff generated are considered by the Board to be minor, the Board, at the recommendation of the Township Engineer, may allow a lesser degree of required control if the applicant can show that there will be no detrimental effects to the environment or to adjacent property owners and that the requirements of the Pennsylvania Stormwater Management Act will be met.

2. A seepage pit or trench connected to a roof drain should be located at least ten feet from the foundation of any structure and generally downhill in the direction of groundwater flow.

3. The storage capacity of a stone seepage pit or trench shall be calculated using a void ratio of 0.40. Infiltration over the bed bottom area may be used in the

calculations for the total amount of storage provided if standard percolation testing is done at the elevation of the bed bottom and a perc rate is established.

4. The bottom of any seepage bed or trench must be above any seasonal and/or permanent water table and above bedrock or be shown to be otherwise capable of handling required design volumes.

5. The rock in seepage pits shall be covered on the top and all four sides with a geotextile fabric appropriate for such application.

6. Seepage pits and trenches shall be kept away from steep man-made slopes.

7. In all cases, an overflow system should be provided to accommodate flows in excess of design criteria. Design of the overflow system shall be approved by the Township Engineer.

8. Seepage pits or the drains to them must contain a sediment trap which can be maintained regularly. All downspouts discharging to seepage beds or trenches should have leaf strainers or grates to retain debris.

9. Where seepage pits are designed to contain cisterns or pipe storage of runoff, access shall be controlled by bar screens spaced to preclude entry of children and most small animals. All such facilities shall have one or more securable means of access for cleanout.

10. All water storage facilities shall be designed to divert flows in excess of their holding capacity to appropriate areas of discharge without damage to property.

11. In addition to seepage beds and trenches, other forms of stormwater management that result in groundwater recharge are encouraged such as the use of lattice blocks for light duty drive areas or porous paving where appropriate. The design for the use of such materials should be discussed with the Township Engineer.

I. Notwithstanding the above, all requirements of the Chester County Conservation District, the Pennsylvania Department of Environmental Resources and the Soil Conservation Service, U.S.D.A., shall be met, and evidence of approvals by those agencies shall be submitted to the Township.

J. For all proposed developments, plans for erosion and sedimentation control and stormwater management must be submitted to the Township for review and approval by the Township Engineer as part of the subdivision and land development approval process, in accordance with Sections 502-E and 503-E of this Ordinance.

K. Formal maintenance guarantees, established in accordance with Section 806 of this Ordinance, shall be required for all stormwater management facilities.

Section 628. Natural Features Conservation

A. Conservation of Surface and Groundwater Resource.

1. Disturbance to the following areas shall be prohibited, unless specifically authorized by the Township Engineer as necessary, and with the minimum feasible disturbance needed:

a. Natural swales, channels and riparian buffer zones.

b. Wetland areas, areas with seasonally high water tables, and areas of surface water concentration.

2. Encroachment within riparian corridors or Flood Hazard District boundaries shall be regulated under the terms of the Township Zoning Ordinance.

3. In addition, the following regulations shall apply:

a. The Board of Supervisors may, when it is deemed necessary for the health, safety, or welfare of the present and future population of the area, and/or necessary to the conservation of water, drainage, and sanitary facilities, prohibit subdivision or development of any portion of the property which lies within the flood plain of any stream or drainage course.

b. All flood plain areas shall be preserved from any and all destruction or damage by clearing, grading, or dumping of earth, waste material, stumps, or other material of any kind.

B. Conservation of Agriculturally-Suited Soils

In subdivisions and land developments where permanent open space is to be retained, the applicant shall, in conformance with other applicable ordinances, include in such open space those agriculturally-suited soils whose acreage, location, and configuration offer continued or future opportunity for agriculture use.

C. Conservation of Woodlands

1. During the site preparation and development process, disturbance to the following shall be minimized:

a. Healthy, well-stocked woodlands. In instances where disturbance or tree-cutting is unavoidable or considered desirable in accordance with sound forest management practice, an effort shall be made, with consultation from a forester or other qualified professional, to retain as much of the woodland as possible, of a size and configuration which would promote its growth and natural regeneration.

b. Vegetation, other than woodlands, providing wildlife food and cover or visual amenity. This may include, but not necessarily be limited to, single or groups of specimen trees, hedgerows, and other vegetation not considered as woodland.

2. If, in the opinion of the Planning Commission, a subdivider proposes streets or building development which would unnecessarily destroy existing tree growth, whether by reason of street alignment, grading or otherwise, the Planning Commission shall either:

a. Suggest an alternative method of subdivision which would preserve as many of the existing trees as possible which measure 6 inches dbh or greater; or

b. Recommend to the Board of Supervisors that, as a condition of their approval, the subdivider be required to plant one new tree of not less than 2-inch dbh for every existing tree of 12-inch dbh or greater which would be destroyed, such new trees to be planted on the lots and not as street trees, as directed by the Board.

3. Disturbance to or removal of vegetation occupying environmentally sensitive areas shall be undertaken only when necessary and on a limited, selective basis to minimize the adverse impacts of such actions. This shall include, but not necessarily be limited to, vegetation performing important soil-stabilizing functions on flood plains, stream and pond banks, and sloping lands.

D. Conservation Practices During Site Preparation

1. Protection of Vegetation from Mechanical Injury

a. Limits of disturbance shall be depicted on the plan and delineated on the ground by use of construction fencing or other effective barrier materials. Limit of disturbance barriers shall be placed and inspected prior to entry of heavy equipment on the site.

b. Operators of heavy equipment shall not damage existing tree trunks and root systems. Roots shall not be cut or disturbed within the area circumscribed by the drip line of any tree. Individual trees shall be preserved by use of construction fencing or another effective barrier.

c. Tree trunks and exposed roots damaged during construction shall be protected from further damage by fencing or other structural barrier. Treatment of damaged trees shall be dictated by the nature of the injury, e.g., damaged bark should be cut back to a point where the bark is intact and tight to the tree, exposed roots shall be cleaned up and covered with top soil.

d. Trees shall not be used for roping, cables, signs, or fencing. Nails and spikes shall not be driven into trees.

e. The area around the base of existing woody vegetation shall be left open. No storage of equipment, materials, debris, or fill shall be allowed within the drip line of any existing tree.

2. Protection of Vegetation from Grading Change

Grade changes to occur at any location on the property shall not result in an alteration to soil or drainage conditions which would adversely affect existing vegetation to be retained following site disturbance, unless adequate provisions are made to protect such vegetation and its root systems.

3. Protection of Vegetation from Excavations

a. When digging trenches for utility lines or similar uses, disturbance to the root zones of all woody vegetation shall be minimized.

b. If trenches must be excavated in the root zone, all disturbed roots shall be cut as cleanly as possible. The trench shall be backfilled as quickly as possible, avoiding soil compaction.

4. Protection During Clean-up

Fences and barriers placed around woody vegetation during construction shall be maintained intact until construction on the lot is complete and authorization for removal is granted by the appropriate Township official.

Section 629. Landscaping

A. Preservation of Existing Vegetation.

1. All subdivisions and land developments shall be laid out in such a manner as to minimize the removal and /or disturbance of healthy trees and shrubs. Special consideration shall be given to mature specimen trees and ecologically significant woodlands.

2. It shall be incumbent on the applicant to prove that vegetation removal is minimized. If challenged by the Township, the applicant shall produce evidence, such as written documents or plans certified by a registered landscape architect or other professional showing that no alternative layouts are possible and that no alternative clearing or grading plan would reduce the loss of mature trees, tree masses or woodlands.

3. Mature trees, tree masses, or woodlands proposed for removal by the applicant during construction shall be labeled "TO BE REMOVED." All other trees, tree masses, or woodlands shall be designated “TO REMAIN.”

4. In addition to trees proposed “TO BE REMOVED” by the applicant, a mature tree, tree masses or woodland shall be considered “TO BE REMOVED” for the purposes of tree replacement if it meets the following criteria:

a. The distance from any proposed building, structure, paving, parking or utilities (overhead or underground) is at least 5 feet from the outermost branches of the tree(s) or 20 feet from the trunk of the tree(s), whichever is greater.

b. The distance from any proposed changes in grade or drainage, such as, excavations, mounding or impoundments is at least 5 feet from the outermost branches of the tree(s) or 20 feet from the trunk of the tree(s), whichever is greater.

5. The existing drainage patterns and water supply for the protected vegetation shall be maintained to the greatest degree feasible.

B. Protection of Existing Vegetation. Existing vegetation designated “TO REMAIN” as part of the landscaping of a subdivision or land development shall be identified in the field prior to any clearing and shall be physically protected throughout the construction process. A temporary physical barrier, such as a snow fence, shall be erected a minimum of 1 foot outside the dripline or a minimum of 20 feet from the tree’s trunk, whichever is greater, on all sides of individual trees, tree masses or woodlands prior to major clearing

or construction. The barrier shall be paced to prevent disturbance to, or compaction of, soil inside the barrier and shall remain until construction is complete. The barrier shall be shown on the erosion and sedimentation control plan and the landscape plan. Reference to the installation of tree protection should be included in the sequence of construction notes to insure incorporation of tree protection at the earliest stages of site disturbance.

C. Replacement of Existing Vegetation.

1. The total area of a lot or tract covered by woodlands, hedgerows and/or individual trees shall be calculated. This calculation shall be based upon the outermost dripline of trees.

2. Up to 25 percent of the total gross area of woodlands, hedgerows, and/or individual trees may be removed without replacement of the vegetation. Trees identified as "TO BE REMOVED" shall be considered as removed trees, including those identified in compliance with Section 629A.4.

3. When site work involves the removal of more than 25 percent of the total gross area of woodlands, hedgerows, and/or individual trees on a lot or tract, 1 shade tree and 2 shrubs or ornamental trees shall be planted for each 500 square feet or fraction thereof of woodlands, hedgerows, and/or individual trees removed in excess of the permitted 25 percent area.

4. Residential lots shall have a minimum of three (3) inches of topsoil as the final grade, and a note shall be added to the final plan. The Township may retain a soil scientist, or other qualified consultants, to confirm that the developer has satisfied this requirement. The cost of this inspection/evaluation shall be born solely by the developer.

D. Street Trees.

1. Street trees shall be required:

a. Along all existing streets when they abut or lie within the proposed subdivision or land development except where existing trees serve to meet the planting requirement.

b. Along all proposed streets.

c. Along access driveways that serve five or more residential dwelling units.

d. Along access driveways that serve two or more nonresidential properties.

e. Along major walkways through parking lots and between nonresidential buildings, as recommended by the Planning Commission.

2. The street tree requirement may be waived by the Township to maintain scenic views of open space, farmland, hedgerows, natural features, or other valued features.

3. Street trees shall be located between the ultimate right-of-way line and the building setback line and shall meet the following standards:

a. Trees shall be planted a minimum distance of 5 feet and a maximum distance of 15 feet outside the ultimate right-of-way line. However, in

certain cases, as follows, the Township may permit trees to be planted within the ultimate right-of-way:

(1). In areas, such as existing villages, where planting areas may be located within the ultimate right-of-way.

(2). In cases where closely spaced rows of street trees may be desirable and future street widening is considered unlikely.

b. In nonresidential developments, trees shall be located within a planting area within the front yard setback, at least ten feet in width, planted in grass or groundcover. In areas where wider sidewalks are desirable, or space is limited, tree planting pits may be used.

c. Trees shall be located so as not to interfere with the installation and maintenance of sidewalks and utilities. Trees shall be planted a minimum distance 12 feet from overhead utilities, and 6 feet from underground utilities.

d. Tree species shall be selected based on appropriate growth rates and mature heights for use beneath and adjacent to overhead utility lines.

e. Trees shall be planted at a rate of at least one tree per 40 linear feet of frontage or fraction thereof. Trees shall be distributed along the entire frontage of the property, although they need not be evenly spaced.

f. Trees shall comply with the requirements of Section 629.K, herein. The use of tree species selected from the List of Recommended Plant Materials is encouraged (Appendix A).

E. Buffer Plantings. Buffer plantings shall be installed in subdivisions and land developments to integrate new development with its surroundings, to separate incompatible land uses by providing screening and to minimize or eliminate views to certain site elements in compliance with the following regulations:

1. Consistent with Table 1, buffer plantings shall be required for the following types of development and as otherwise specified in the Zoning Ordinance:

a. All nonresidential development.

b. All single family detached development.

c. All multi-family and single-family attached development.

d. All cluster development, or subdivisions utilizing the conservation design option.

e. All mobile home parks.

f. Construction of any of the following items which exceeds 4,000 square feet in ground coverage:

(1). public utility facilities or structures,

(2). waste collection, storage and/or treatment facilities

(3) any other structure of similar character or impact.

2. An on-site investigation by the applicant shall determine the adjacent land uses along each property boundary. In the case of vacant land, the existing zoned uses shall be used. The existing or zoned uses shall be noted on the plan. In the case of several permitted uses on a site, the most restrictive landscaping requirements shall apply. The Township shall have final approval of interpretation of land uses or zoning map.

3. Buffer Area Location and Dimensions

   a. A buffer planting area of not less than 25 feet in width shall be established along all property lines of the site proposed for subdivision or land development, unless otherwise specified in the Zoning Ordinance. Where zoning regulations allow building setbacks less than 25ft., the buffer area may be reduced to equal the width of the minimum building setback.

   b. The buffer area may be included within the front, side, or rear yard setback.

   c. The buffer area shall be a continuous pervious planting area consisting of tall canopy trees, small understory trees, and shrubs, with grass or groundcover. No paving shall be permitted within the buffer areas except for driveway crossing and/or walkways.

   d. Parking is not permitted in the buffer area.

   e. Stormwater basins are permitted in the buffer area provided that the visual screening requirement of the buffer is still met.

4. The minimum planting requirements shall be determined by the intensity of the proposed land use and the adjacent land use or most restrictive zoning district, according to Table 1.

5. Minimum Plant Material Requirements. The following requirements are minimum standards; additional plant material, grading treatments, or architectural elements may be included in the plan, at the applicant's discretion. In accordance with Table 1, for every 100 linear feet of property line and external street boundaries of the site proposed for subdivision or land development to be buffered, the following minimum quantities, types and sizes of plant material shall be required:

Softening Buffer:	1 canopy tree (2 ½" min. caliper) 2 understory trees (1 ½ " min. caliper) 2 evergreen trees (8' min. ht.)
Filtering Buffer:	2 canopy tree (2 ½ " min. caliper) 2 understory trees (1 ½ " min. caliper) 5 evergreen trees (8' min. ht.) 5 shrubs (24" min. ht.)
Screening Buffer:*	8 evergreen trees (8' min. ht.) 2 understory trees (1 ½ " min. caliper) 2 tall canopy trees (2 ½ " min. caliper) 10 shrubs (24" min. ht.)

	-or- 30 upright evergreen shrubs (4' min. ht.) -or- 15 upright evergreen shrubs (4' min. ht.) & 4 ornamental trees (1 ½ " min. caliper) or 3 canopy trees (2 ½" min. caliper) -or- An alternative planting design that will result in at least an equivalent degree of visual screening to one of the above screening buffers.
Limited Area/Buffer:**	1 upright evergreen shrub per 3 feet (4' min. ht.) -or- 4-6 foot solid fence or wall

*A screening buffer must be adequate to visually screen the proposed land use or development from off-site view. Several different planting options could be used to create an effective buffer. Grading treatments and architectural features, such as walls, fences and/or naturally undulating berms may be necessary in addition to the minimum planting quantities in order to effectively provide a visual screen.

**The limited area/buffer can be used in older developed areas where space for planting is severely restricted. The planting screen would be equivalent to an evergreen hedge planting. Alternative planting arrangements, such as shade or flowering trees with deciduous shrubs, could be considered in conjunction with a fence or wall, at the discretion of the Planning Commission.

6. Mitigation of Visual Impacts. The use of a screening buffer planting shall be required to mitigate the adverse visual impacts which proposed land uses or site elements will have on the subject tract, adjoining properties and the community in general. In addition to the requirements for buffer plantings as listed in Table 1, the following proposed land uses and site elements shall be screened from off-site with a screening buffer planting:

   a. Dumpsters, trash disposal, recycling areas, and mechanical equipment.

   b. Service and loading docks.

   c. Outdoor storage areas.

   d. Sewage treatment plants and pump stations.

7. Existing topographic conditions, such as embankments or berms, in conjunction with existing vegetation, may be substituted for part or all of the required property line buffers at the discretion of the Township. The minimum visual effect shall be equal to or exceed that of the required buffer or screen.

8. Property line buffers shall be required notwithstanding the prior placement of such buffers on adjacent properties. The requirements of this section are intended to be cumulative.

Table 1

LOT LINE BUFFERS

(See Section 629.E.5 for definition of softening, filtering and screening buffers)

	ADJACENT USE OR ZONING DISTRICT			
PROPOSED USE	Office/Institutional and Recreational	Commercial / Industrial	Multifamily, Single-Family Attached, Mobile Home Parks	Two-Family, Single-Family Detached
Office/Institutional*	Softening	Softening	Filtering	Screening
Commercial/Industrial	Filtering	Softening	Screening	Screening
Multifamily, Single-Family Attached, Mobile Home Parks	Softening	Screening	Filtering	Screening
Two-Family, Single-Family Detached	Softening	Screening	Screening	Filtering
Active Recreation (playing fields, golf courses, swim clubs, etc.)	Softening	Filtering	Softening	Softening

**All uses in office/limited industrial parks shall be considered Office/Institutional Uses.*

F. Parking Lot Landscaping.

1. Parking lots shall be effectively landscaped with trees and shrubs to reduce the visual impact of glare, headlights, and parking lot lights; to delineate driving lanes; and define rows of parking. Furthermore, parking lots should be adequately landscaped to provide shade in order to reduce the amount of reflected heat and to improve the aesthetics of parking lots.

2. All parking lots shall be landscaped according to the following regulations:

   a. One planting island shall be provided for every fifteen parking stalls. There shall be no more than fifteen contiguous parking stalls in a row without a planting island. Alternative planting island designs (without planting islands located every fifteen contiguous parking spaces) must provide one canopy tree for every ten parking spaces in planting island areas and perimeter parking planting areas at the discretion of the Township.

   b. The ends of all parking rows shall be divided from drives by planting islands.

   c. In residential developments, large parking lots shall be divided by planting strips into smaller parking areas of no more than 40 stalls.

d. In nonresidential developments, large parking lots shall be divided by planting strips into smaller parking areas of no more than 100 stalls.

e. Planting islands shall be a minimum of one parking stall or nine feet by eighteen feet (9' x 18') in area whichever is greater, underlain by soil (not base course material) and shall be protected by curbing, wheel stops, or bollards. Each planting island shall contain one shade tree plus low-growing shrubs and/or groundcover to cover the entire area.

f. All planting strips shall be a minimum of fifteen (15) feet wide. Strips shall run the length of the parking row, underlain by soil, and shall be protected by curbs, wheel stops, or bollards. Planting strips shall contain plantings of one canopy tree every 25 feet, plus shrubs and/or groundcover to cover the entire area at maturity.

g. The placement of light standards shall be coordinated with the landscape plan to avoid a conflict with the effectiveness of light fixtures.

h. Plant materials shall comply with the requirements of Section 629.K, herein. The use of plantings selected from the List of Recommended Plant Material, Appendix A, is encouraged.

3. All parking lots shall be screened from public roads and from adjacent properties according to the following:

a. The perimeter of all parking lots shall be planted with a filtering buffer as per Section 629.E.

b. The perimeter planting area shall be a minimum 10 foot width.

G. Additional Plantings.

1. All proposed non-residential structures shall incorporate the following minimum plant materials in the landscaping areas adjacent to the proposed structure:

a. 1 canopy tree (2 ½ inch minimum caliper) or 2 understory trees (8 foot minimum height) shall be planted for every 50 feet of proposed building façade facing a public street.

b. 5 deciduous or evergreen shrubs (18 inch minimum height) shall be planted for every 20 feet of proposed building façade facing a public street.

c. Planting areas shall be a minimum 150 square feet with a minimum 10 foot width.

d. Twenty-five percent of the area between the building facade and the front building driveway curb shall consist of pervious planting areas.

2. All proposed detached residential lots shall plant one canopy tree per 10,000 square feet of lot area. Existing trees preserved in viable condition during construction may satisfy this requirement.

3. All proposed attached residential units shall plant one canopy tree for every two dwelling units. At the discretion of the Township, required building facade

plantings may be located on other areas of the site, if sufficient planting space is not available immediately adjacent to the proposed structure.

H. Stormwater Basins and Associated Facilities. Landscaping shall be required in and around all stormwater management basins according to the following:

1. All areas of stormwater management basins, including basin floors, side slopes, berms, impoundment structures, or other earth structures, shall be planted with suitable vegetation such as naturalized meadow plantings or lawn grass specifically suited for stormwater basins (see Appendix A for recommended plants for stormwater basins).

2. Trees and shrubs shall be planted in and around stormwater basins given they do not interfere in the proper function of the basin and no trees are planted within 30 feet of an outlet/drain structure, emergency spillway or dam. A minimum planting of two (2) trees and ten (10) shrubs per 100 linear feet of basin perimeter shall be planted in and around the basin.

3. Naturalized ground cover plant species, such as wildflowers, meadows, and nonaggressive grasses specifically designed for the permanently wet, intermittently wet, and usually dry areas of stormwater basins, shall be seeded in the floors and slopes of the basin given:

   a. The plantings provide a satisfactory continuous cover to all areas of the basin.

   b. The plantings do not interfere in the safe and efficient function of the basin as determined by the Township engineer.

   c. Lawn grass areas may be sodded or hydro-seeded to minimize erosion during the establishment period. Once established, these turfgrass areas shall be maintained at a height of not more than six inches.

4. Basin shape shall incorporate curvilinear features to blend with the surrounding topography.

5. Stormwater basins shall be screened from adjacent properties using buffer plantings according to Section 629.E.

I. Riparian Corridor Planting Requirements. In areas within the Riparian Corridor Conservation District, as defined in Article XIII of the Honey Brook Zoning Ordinance, the edge of water features and stream corridors should be in forest cover to further the ecological and environmental benefits, as stated in the Riparian Corridor Conservation District (RCCD). To promote re-establishment of forest cover and woodland habitat, new tree plantings shall be implemented in Zone One wherever existing trees do not meet the minimum requirements below:

1. Existing trees within Zone One shall be preserved and retained. Existing tree cover should be surveyed and inventoried to assess the need for any new plantings. Existing tree species included on the noxious/invasive plant species list, Appendix B, should be removed where conditions warrant.

2. New trees shall be planted at a minimum rate of 15 feet on center or one tree per

225 square feet in staggered naturalized rows or an equivalent informal arrangement within the area defined as Zone One by the RCCD.

3. New trees shall be a variety of sizes ranging from a minimum 4 to 5 foot branched whip to an approximate 1 ½ inch caliper balled and burlapped planting stock.

4. New tree plantings shall be composed of trees suitable for stormwater detention basins.

5. Tree plantings shall be located along the streambank to provide shade for the stream, soil erosion control and stormwater benefits, according to accepted streambank restoration practices.

J. Landscape Design Criteria.

1. Plantings shall be provided in arrangements and locations which best mitigate the adverse impacts of the applicant's proposed site development. The required plant material shall be distributed over the entire length and width of any required buffer area.

2. Plantings shall be spaced to comply with the visual mitigation requirements with consideration given to the provision for the future growth habits and mature sizes of selected plant species.

3. Plant species selection shall be based on the following considerations:

   a. Existing site conditions and their suitability for the selected plants, based on the site's soils, hydrology and microclimate.
   b. Specific functional objectives of the plantings which may include but not be limited to visual screening, noise abatement, energy conservation, wildlife habitat, erosion control, stormwater management, and aesthetic value.
   c. Maintenance and replacement considerations such as hardiness, resistance to insects and disease, longevity, availability and cost of plant materials.
   d. A minimum variety of tree species is required as follows:

NUMBER OF TREES	MINIMUM NUMBER OF TREE SPECIES	MAXIMUM % OF ANY ONE SPECIES
0-5	1	100%
6-15	2	50%
16-30	3	40%
31-50	4	30%
51+	6	20%

4. Existing healthy trees, shrubs, or woodlands may be substituted for part or all of the required plant material at the discretion of the Township. The minimum quantities and/or visual effect of the existing vegetation shall be equal to or exceed that of the required buffer. In order for existing vegetation to qualify for required buffer plantings, proof must be demonstrated that adequate protection measures, particularly in the plant's root zone, are incorporated into the plan.

5. Plant materials shall meet the specifications of Section 629.K.

K. Plant Materials Specifications, maintenance, and Guarantee. The following standards shall apply to all plant materials or transplanted trees as required under this Ordinance.

1. Plant Specifications.

   a. All plants shall meet the minimum standards for health, form, and root condition as outlined in the American Association of Nurserymen (AAN) Standards.

   b. Proposed plant materials shall meet or exceed the minimum planting size requirement for the intended landscape use. Use of plantings selected from the List of Recommended Plant Material (Appendix A) is recommended.

2. Maintenance.

   a. Required plant material shall be maintained for the life of the project to achieve the required visual effect of the buffer or screen. It shall be the ultimate responsibility of successive property owners to insure that the required plantings are properly maintained. Dead or diseased plant material shall be removed or treated promptly by the property owner and replaced at the next planting season.

   b. Safety. All sight triangles shall remain clear, and any plant material that could endanger safety such as unstable limbs shall be removed and the plant material replaced if necessary. It shall be the responsibility of the property owner to maintain all plantings and architectural elements to insure a safe environment.

   c. Maintenance guidelines for the plantings are encouraged to be published by the planting plan designer, to be used by grounds maintenance personnel to insure that the design's buffering and screening concepts are continued.

3. Landscape Financial Security.

   a. Any tree or shrub that dies within 18 months of planting shall be replaced by the current land owner or developer. Any tree or shrub that within 18 months of planting or replanting is deemed, in the opinion of the Township Engineer, not to have survived or not to have grown in a manner characteristic of its type, shall be replaced. Substitutions for certain species of plants may be made only when approved by the Township Engineer.

   b. The developer or landowner shall deposit with the Township a sum of money equal to the amount necessary to cover the cost of purchasing, planting, maintaining, and replacing all vegetative materials for a period of 18 months.

L. Plan Requirements.

1. Preliminary Landscape Plan shall show the following:

   a. Existing Features. The location and character of existing buildings,

mature trees standing alone; outer limits of tree masses and other existing vegetation; the location of floodplains, wetlands, and other natural features that may affect the location of proposed streets, buildings, and landscape plantings.

b. Proposed Landscaping:

(1). Approximate location of all proposed landscaping required under this Ordinance.

(2). Demarcation of existing vegetation "TO REMAIN" or "TO BE REMOVED" and the means of protecting existing vegetation during construction.

(3). Approximate location of proposed buildings, paving, utilities, or other improvements.

2. Final Landscape Plan.

a. Drafting Standards. The same standards shall be required as for a preliminary plan.

b. Information to be shown:

(1). Plan scale, date, north arrow, and location map with zoning district designations for the site and adjacent properties.

(2). Location of all existing and proposed buildings and structures.

(3). Location of all existing and proposed roads, parking, service areas, and other paved areas.

(4). Location of all outside storage and trash receptacle areas.

(5). Sidewalks, berms, fences, walls, free-standing signs and site lighting.

(6). Existing and proposed underground and aboveground utilities such as site lighting, transformers, hydrants, manholes, valve boxes, etc. (Reference may be made to other submission drawings.)

(7). All existing and proposed contours at 2-foot intervals to determine the relationship of planting and grading, areas with slopes in excess of 3:1 shall be highlighted on the plan.

(8). Existing mature trees, woodlands and tree masses to remain.

(9). Existing mature trees, woodlands and tree masses to be removed.

(10). Location of all proposed landscaping, including required street trees, stormwater basin landscaping, parking lot landscaping, property line buffer, and site element screen landscaping.

(11). A planting schedule listing the scientific and common name, size, quantity, and root condition of all proposed plant material.

(12). A schedule showing all landscape requirements and plantings

proposed for each category.

(13). Planting details, including method of protecting existing vegetation, and landscape planting methods.

(14). Information in the form of notes or specifications concerning seeding, sodding, groundcover, mulching, and the like, etc.

(15). A detailed cost estimate shall be submitted with the public improvement escrow, showing the value of all proposed landscaping, including all labor, materials and guarantee.

c. This condition may be satisfied through a land development agreement with sufficient and appropriate financial guarantees.

d. Certificates. When approved, the landscape plan must show:

(1). The signature and seal of the registered landscape architect responsible for preparing the landscape plan and details.

(2). The signature of the subdivider, developer or builder.

(3). The signatures of the elected officials, engineer or landscape architect, and planning commission.

ARTICLE VII: MOBILE HOME PARKS

Section 701. Definitions

In addition to the applicable definitions contained in Article II of this Ordinance, the following additional terms are used explicitly in the provisions of this Article. For purposes of this Article, they shall be defined as follows:

A. ANCHORING – as per applicable requirements of the Uniform Construction Code.

B. HITCH – A device which is part of the frame or attaches to the frame of a mobile home and connects it to a power source for the purpose of transporting the unit.

C. MOBILE HOME FOUDATION – Frost-free piers, consistent with current building code requirements, on which a mobile home shall be placed and secured.

D. MOBILE HOME PARK PERMIT – A written permit issued by the Zoning Officer and subject to annual renewal, permitting the mobile home park to operate under this Ordinance and other pertinent Ordinances and regulations.

E. SKIRT – A panel specifically designed for the purpose of screening the underside of a mobile home by forming an extension of the vertical exterior walls of the mobile home and covering the entire distance between the bottom of the exterior walls and the ground elevation below.

Section 702. Application Procedure

A. Submission and Review Procedure

An application for development of a tract of land for mobile home park purposes shall be made and approved, or approved as modified, before any mobile home park permit for such use shall be issued. The requirements of Article IV of this Ordinance shall govern the submission, processing, and review of all applications for mobile home park development.

B. Content of Application

1. The requirements of Article V of the Ordinance shall govern the content of all applications for mobile home park development.

2. In addition to the requirements contained in Article V, an application for preliminary or final approval of a mobile home park shall indicate by drawings, diagrams, maps, text, affidavit, or other legal instrument, the following:

a. The tract for which application is made is held in single and separate ownership.

b. The placement, location, and number of mobile home lots and mobile home pads, consistent with the terms of Section 703 or the Ordinance, on a layout map of the tract at a scale of one inch equals 50 feet.

c. The location and dimension of all driveways, pedestrian ways, sidewalks, and access roads with notation as to type of impervious cover.

d. The location, dimension, and arrangement of all areas to be devoted to lawns, buffer strips, screen planting, and common open space, including areas for recreation.

Section 703. Density, Dimensional, and General Layout Standards

A. Area and Density Regulations

1. Each mobile home lot shall be clearly marked and shall contain a driveway with unobstructed access to a street.
2. Each mobile home shall be located on the lot so that there will be a minimum of 30 feet between mobile homes and so that no mobile home will be less than 50 feet from any exterior boundary of the mobile home park.
3. The minimum size of any mobile home lot shall be established by the bulk and dimensional requirements of the applicable zoning district.
4. The minimum frontage for any mobile home lot shall be established by the bulk and dimensional requirements of the applicable zoning district.
5. No mobile home shall be located less than 50 feet from any public or private street right-of-way or so that any part of such mobile home will obstruct any roadway or walkway in a mobile home park.
6. No service building shall be located within 50 feet of any public or private street right-of-way.

B. Site Layout

1. Mobile Homes placed on individual lots are encouraged to be placed off-center on the lots so as to provide a large usable open yard space and outdoor living area in one section of the lot.
2. Groups or clusters of units, so placed as to create interior spaces and courtyards, shall be incorporated whenever feasible.
3. There shall be variety in the arrangement and orientation of mobile homes, with particular attention given to topography and existing trees. Site layout shall be designed to ensure that mobile home units are offset to avoid long, uninterrupted corridors between the units.
4. The applicant is strongly encouraged to design the mobile home park so that many units have their long axis east-west, offering southern exposure to their longest wall and roof areas. When topographic conditions make a street layout for good solar orientation of units difficult or undesirable, lots should be laid out so that units can be oriented to the south to the greatest extent possible.

Section 704. Street System

With the exception of those standards specified in this Section, all standards pertaining to streets in Article VI of this Ordinance shall govern the design and construction of streets in a mobile home park.

A. Access and street frontage

Access to any mobile home lot shall be from a street interior to the mobile home park. Where mobile home lots are created having frontage on an existing street within the Township, the mobile home park street pattern shall provide reverse frontage access to an interior street within the mobile home park, and not to the existing street.

B. Street widths

The mobile home park interior street system shall be functionally classified in terms of minor collector and local streets, as defined in this Ordinance. Street widths shall be as prescribed in Section 607 of this Ordinance.

C. Illumination of streets and walkways

In addition to the standards of Section 620 of this Ordinance, all mobile home parks shall be furnished with lighting fixtures so spaced and so equipped with luminaries as will provide adequate levels of illumination throughout the park for the safe movement of vehicles and pedestrians at night.

Section 705. Off-street Parking Areas and Walks

A. The requirements for driveways contained in §615 of this Ordinance shall be applicable to all mobile home parks.

B. Off-street parking for at least two motor vehicles shall be provided on each mobile home lot. Each parking stall shall be at least 10 feet by 20 feet and shall have an all-weather paved surface acceptable to the Township, which shall be specified in the plan.

C. Additional parking spaces for vehicles of non-residents shall be provided at the rate of one space for every three mobile home lots. Such parking spaces shall be provided through off-street common parking areas, and shall be in locations that are sufficiently dispersed throughout the park to serve all mobile home units, as determined by the Board or Supervisors.

D. Parking is prohibited on internal roads. It shall be the duty of the owner or operator of the mobile home park to enforce this provision.

E. All mobile home parks shall provide -sidewalks in accordance with specifications of Section 618.

Section 706. Stormwater Management

The provisions of Section 627 of this Ordinance shall be applicable to all mobile home park developments.

Section 707. Water Supply

The provisions of Section 623 of this Ordinance shall be applicable to all mobile home park developments.

Section 708. Sewage Treatment and Disposal

The provisions of Section 622 of this Ordinance shall be applicable to all mobile home park developments.

Section 709. Utility Distribution System

All utilities shall be installed and maintained in accordance with the terms of Section 624 of this Ordinance.

Section 710. Common Open Space Areas

A. Minimum amount of common open space

At least 25% of the gross area of each mobile home park shall be set aside as common open space for the use and enjoyment of the residents of the mobile home park. Such common open space shall be substantially free of structures except for those designed for recreational purposes, and shall be in addition to those areas devoted to meeting the buffer requirements of this Ordinance.

B. Standards for location and management

Common open space areas shall be located and designed as areas easily accessible to residents and preserving natural features. Such areas shall comply with the standards for common open space and facilities contained in §625 of this Ordinance.

Section 711. Buffering, Screening, and Landscapes

All mobile home parks shall provide a landscaping plan that complies with the requirements if Section 629 of this ordinance.

Section 712. Service Buildings and Facilities

A. Uses and activities

Where a service building is provided, it must contain a toilet and lavatory for each sex and storage areas for occupants of the park. In addition, the applicant may provide laundry facilities, management office, repair shop, indoor recreational facilities and/or commercial uses to supply essential goods and services to park residents only. It is also recommended that the applicant provide sheltered waiting areas for transportation and a mail box area for residents.

B. Construction and maintenance

Construction of service buildings shall be in compliance with all applicable building codes, plumbing codes, etc., and shall be maintained in a clean, sanitary and structurally safe condition.

Section 713. Fuel Supply and Storage

A. Liquified petroleum gas system

1. The design, installation, and construction of containers and pertinent equipment for the storage and handling of liquefied petroleum gasses shall conform to the Act of the Pennsylvania Legislature of December 27, 1951, P.L. 1793, as it may be amended; and to the regulations therefore promulgated by the Pennsylvania Department of Labor and Industry, or its successor.

2. Liquified petroleum gas systems provided for mobile homes, service buildings or other structures, when installed, shall be maintained in conformance with the rules and regulations of the Pennsylvania Department of Labor and Industry and shall include the following:

   a. Systems shall be provided with safety devices to relieve excessive pressures and shall be arranged so that the discharge terminates at the safe location.

   b. Systems shall have at least one accessible means for shutting off gas. Such means shall be located outside the mobile home and shall be maintained in effective operating condition.

   c. All liquefied petroleum gas piping outside of the mobile home shall be well supported and protected against mechanical injury. Undiluted liquefied petroleum gas in liquid form shall not be conveyed through piping equipment or systems in mobile homes.

   d. Vessels of at least 12 U.S. gallons and less than 60 U.S. gallons gross capacity shall be maintained in a vertical position and shall be securely, but not permanently, fastened to prevent accidental overturning. No vessel shall be placed any closer to a mobile home exit than five feet, and no closer to any window than three feet.

   e. No liquified petroleum gas vessel shall be stored or located inside or beneath any storage cabinet, carport, mobile home, or any other structure.

   f. All pipe connections shall be of a flare type.

B. Fuel oil supply systems

1. All fuel oil supply systems provided for mobile homes, service buildings, and other structures shall be installed and maintained in conformance with the rules and regulations of the authority having jurisdiction.

2. All piping from outside fuel storage tanks or cylinders to mobile homes shall be securely, but not permanently, fastened in place.

3. All fuel oil supply systems provided for mobile homes, service buildings, and other structures shall have shut-off valves located within five inches of storage tanks.

4. All fuel storage tanks or cylinders shall be securely placed and shall not be less than five feet from any mobile home exit, and not less than three feet from any window.

5. Storage tanks located in areas subject to traffic shall be protected against physical damage.

Section 714. Electrical Distribution System

A. General requirements

Every park shall contain an electrical wiring system consisting of wiring, fixtures, equipment, and appurtenances which shall be installed and maintained in accordance with the electric power provider's specifications regulating such systems.

B. Power distribution lines

All power distribution lines located within the private street right of way shall be placed in conduit. Conduit specifications and minimum cover requirements shall meet or exceed be compliant with NFPA 70 National Electrical Code.

C. Individual electrical connections

1. Each mobile home lot shall be provided with an approved disconnecting device and overcurrent protective equipment. The minimum service per outlet shall be 120/240 volts AC, 100 amperes.

2. The mobile home shall be connected to the outlet receptacle by an approved type of flexible cable with connectors and a male attachment plug.

3. Where the calculated load of the mobile home is more than 60 amperes, either a second outlet receptacle shall be installed or electrical service shall be provided by means of permanently installed conductors.

D. Required grounding

All exposed non-current carrying metal parts of mobile homes and all other equipment shall be grounded by means of an approved grounding conductor run with branch circuit conductors or other approved method of grounded metallic wiring. The neutral conductor shall not be used an equipment ground for mobile homes or other equipment.

Section 715. Fire Protection

A. All mobile parks shall be provided with fire hydrants, as specified under the terms of Section 623 of this Ordinance.

B. Where the water supply system does not provide at least a 6-inch water main, there shall be provided a two-inch frost-protected water riser within 300 feet of each mobile home or building.

C. Portable hand-operated fire extinguishers of a type suitable for use on oil fires and approved by the local fire prevention authority shall be kept in each service building under park control. Two 12-lb. portable fire extinguishers shall be placed in each mobile home in the park, located inside the mobile home in a fixed location preferably near a

door but not in close proximity to cooking facilities. It shall be the responsibility of the mobile home park operator to enforce the requirement.

D. The mobile home park manager shall consult periodically with the local fire prevention authority as to proper fire prevention practices, accessibility of streets, testing of fire hydrant pressure, location and operation of equipment, community education programs, and the like.

Section 716. Solid Waste Collection and Disposal

A. The storage, collection, and disposal of solid waste in any mobile home park shall be so managed as to create no health hazard, rodent harborage, insect breeding area, accident or fire hazard, or air pollution.

B. All mobile home parks shall be provided with solid waste collection stations at convenient but inconspicuous locations, each serving not more than 15 mobile homes, and consisting of self-closing containers, with separate containers for garbage and trash, placed on a concrete slab and accessible for truck pick-up, and completely screened from view by solid fencing.

Section 717. Miscellaneous Structural Requirements

A. Additions and alterations

No permanent addition shall be built onto or become a part of any mobile home, and no plumbing or electrical alteration or repair shall be made, unless in accordance with all applicable state, county, and township, laws, Ordinances, and regulations.

B. Mobile home foundation

A foundation, as defined in Section 701-C of this article, with dimensions sufficient to support the intended unit shall be provided for all mobile homes. Such foundation shall be properly placed and constructed so as to be durable and adequate for the support of the maximum anticipated loads during all seasons.

C. Anchoring

Every mobile home placed within a mobile home park shall be anchored in accordance with the applicable requirements of the BOCA Code.

D. Skirts

Each mobile home placed within a mobile home park shall, prior to occupancy or other use, have a skirt installed which is designed to complement the appearance of the mobile home and is coordinated with other units throughout the park.

E. Hitch

If a hitch or towbar is attached to a mobile home for transport purposes, it shall be removed and remain removed from the mobile home when it is placed on its mobile home pad.

Section 718. Permits, Licenses and Inspections

A. Permits required

It shall be unlawful for any person to construct, alter, extend, or operate a mobile home park within the Township unless and until he/she obtains:

1. A valid permit issued by the Chester County Health Department, in the name of the operator, for a specified construction, alteration, or extension proposed;

2. A permit issued by the Township Zoning Officer in the name of the operator, which shall not be issued until a copy of the Health Department permit has been furnished, all permits for water supply and sewage systems shall have been obtained, and all other requirements contained herein have been complied with, and final approval of the application and been granted by the Board of Supervisors; and

3. A building permit issued by the Township for the placement of any mobile home on a mobile home lot, including the relocation of an existing mobile home from one lot to another within a mobile home park.

B. Annual licenses

The operator of a mobile home park shall comply with the requirements for obtaining an annual license per Ordinance #79-1998, Honey Brook Township Mobile Home Park Regulations or its successors. This requirement shall be noted on the plans for a mobile home park development. Periodic inspections shall be conducted by the Zoning Officer to ensure compliance with this ordinance.

ARTICLE VIII: CONSTRUCTION AND ACCEPTANCE OF IMPROVEMENTS

Section 801. Construction Required

The applicant shall construct all streets, together with all other improvements, including grading, paving, curbs, gutters, sidewalks, street lights, fire hydrants, water mains, street signs, shade trees, storm drainage facilities, sanitary sewers, landscaping, traffic control devices, open space and restricted areas, and erosion and sediment control measures in conformance with the final plan as approved, the applicable provisions of the most current *PennDOT Specifications, Form 408*, and other applicable regulations.

Section 802. Inspections

A. The construction or installation of all improvements shall at all times be subject to inspection by representatives of the Township. If such inspection reveals that work is not in accordance with approved plans and specifications, that construction is not being done in a workmanlike manner, or that erosion or sediment controls are failing to prevent accelerated erosion or water-borne sediment from leaving the site of construction, said representative is empowered to require corrections to be made and/or the suspension of subdivision approval, and to issue a cease and desist order which may include any or all of the following sanctions:

1. That no lot in the subdivision shall be conveyed or placed under agreement of sale;
2. That all construction on any lots for which a building permit has been issued shall cease; and/or
3. That no further building permits for any lots shall be issued.

B. The cease and desist order shall be terminated upon determination by the Township that the said defects or deviations from plan requirements have been corrected.

C. It shall be the responsibility of the subdivider, developer, builder, or contractor to notify the municipal engineer or other duly authorized person a minimum of two working days in advance of the commencement of any construction or installation of any facility or utility required by this ordinance or by the approved subdivision or land development plan, in order that provisions may be made for inspection by the Township.

D. In addition to the advance notice required in Subsection C, above, it shall be the responsibility of the subdivider, developer, builder, or contractor to call, at minimum, for the following specific inspections, by notifying the municipal engineer or other duly authorized person a minimum of one working day in advance of the time anticipated for the required inspection:

1. Key trench for stormwater retention or detention basins, following excavation but prior to the placement of any backfill.
2. Footings for structures, following excavation but prior to the commencement of any further construction work on the structure.

3. All pipe work, including pipe spillways in stormwater retention or detention basins, storm drains, and utilities before pipes are covered by backfill.

4. Street subgrade when completed, but before the start of installation of curbs or base course.

5. Curbs and/or sidewalks, when crushed stone or gravel base is in place, and during the subsequent concrete pours.

6. Crushed aggregate base course, during its installation.

7. Bituminous surface binder course, during its installation.

8. Bituminous surface wearing course, during its installation.

9. Final inspection.

Section 803. Release from Performance Guarantee

A. When the developer has completed all of the necessary and appropriate improvements, the developer shall notify the Township, in writing, by certified or registered mail, of the completion of the aforesaid improvements and shall send a copy thereof to the municipal engineer. The Township shall, within ten (10) days after receipt of such notice, direct and authorize the municipal engineer to inspect all of the aforementioned improvements. The municipal engineer shall, thereupon, file a written report with the Township, and shall promptly mail a copy of the same to the developer. The report shall be made and mailed within 30 days after receipt by the municipal engineer of the aforesaid authorization from the Board; said report shall be detailed and shall indicate approval or rejection of said improvements, either in whole or in part. If said improvements, or any portion thereof, shall not be approved or shall be rejected by the municipal engineer, said report shall contain a statement of reasons for such nonapproval or rejection, either in whole or in part.

B. Approval of improvements shall not be given until all construction debris has been disposed of through appropriate measures. No such debris shall be buried, burned, or otherwise disposed of on the site except in compliance with properly issued regulatory permits.

C. The Township shall, within 15 days of receipt of the municipal engineer's report prepared under Subsection A, above, notify the developer by mail of the action of the Board with regard to approval, nonapproval, or rejection of improvements.

D. If any portion of the said improvements shall not be approved or shall be rejected by the Board, the developer shall proceed to complete those improvements and, upon completion, the same procedure of notification as outlined herein shall be followed.

E. The developer shall be responsible for maintenance of all subdivision or land development improvements until such improvements are offered for dedication and are accepted by the Township. In addition, 10 percent of the performance guarantee shall be held back by the Township until the developer has posted a maintenance guarantee, as provided for in Section 806, and as-built plans are verified and accepted by the Township.

F. Partial releases of the performance guarantee during the period of construction shall be authorized as per Section 410-G.

Section 804. As-built Plans

After completion and Township approval of subdivision or land development improvements as shown on final plans, and before Township acceptance of such improvements, the developer shall submit to the Board a corrected copy of said plans showing actual dimensions and conditions of streets and all other improvements, certified by an engineer or surveyor to be in accordance with actual construction.

A. Upon completion of any public improvements shown on an approved subdivision plan and within 90 days after approval of such public improvements as herein provided, the developer shall submit written offer of such public improvements for dedication to the Township. Said offer shall include a deed of dedication covering said public improvements together with satisfactory proof establishing the developer's clear title to said property. Such documents are to be filed with the municipal Secretary for review by the municipal Solicitor. Deeds of dedication for public improvements may be accepted by resolution of the Board at a meeting thereof. The Board may require that at least 75% of the lots in any approved subdivision or land development (or phase thereof, if final plan approval has been in phases) have certificates of occupancy issued for buildings thereon prior to acceptance of dedication. Should the streets, even though constructed according to the specifications of this Ordinance, deteriorate before the said 75% of the lots have certificates of occupancy issued, such streets shall be repaired in a manner acceptable to the Board before being accepted by the Township.

B. For major subdivisions, a digital submission is required in addition to the paper plan submission in either a .dxf or .dwg format compatible with AutoCAD 2000 LT. This submission shall be on a compact disc CD in uncompressed format or a ZIP disc standard compression format only. The digital submission shall provide an exact duplicate of paper drawings. Raster format data or external drawing data shall be imported as blocks, not external references. Proprietary fonts shall not be used. Elevations shall be referenced to the State Plane Coordinate System. The digital submission shall be prepared to meet commonly accepted drafting and engineering industry standards for layers, but shall, as a minimum, include descriptive information layers containing the following:

a. Lot lines (no text).

b. Right-of-way lines (no text).

c. Street center lines (no text).

d. Edge of pavement lines/curb lines.

e. Easements; separate layers for water, sanitary sewer and stormwater, which must be further separated for improvements offered for dedication and those improvements to be held in private deed restrictions.

f. Floodhazard; separate layers for FEMA delineated and calculated floodhazards.

g. Utilities; separate layers for water and sanitary sewers.

h. Stormwater facilities; separate layers for facilities offered for dedication and those to be held in private ownership and/or under easement, i.e., swales, basins, etc."

C. Where maintenance of stormwater retention facilities or private streets are to be the responsibility of individual lot owner, a homeowners association or similar entity, or an organization capable of carrying out maintenance responsibilities, the Board shall require that maintenance responsibilities be set forth in perpetual covenants or deed restrictions binding on the landowner's successors in interest, and may further require that an initial maintenance fund be established in a reasonable amount.

ARTICLE IX: ADMINISTRATION

Section 901. Relief from Unnecessary Hardship

A. The Board of Supervisors may grant a modification of the requirements of one or more provisions of this Ordinance, if the literal enforcement will exact undue hardship because of peculiar conditions pertaining to the land in question, provided that such modification will not be contrary to the public interest and that the purposes and intent of this Ordinance are observed.

B. Any request for a modification shall be in writing and shall accompany and be a part of the application for development. The request shall state in full the grounds and facts of unreasonableness or hardship on which the request is based, the provisions of the Ordinance involved, and the minimum modification necessary.

C. The Board may refer the request for modification to the municipal Planning Commission for advisory comments.

D. In granting modifications, the Board may impose such conditions, acceptable to the applicant, as will, in its judgment, secure substantially the objectives of the standards and requirements so modified. The granting of any conditional approval shall be in accordance with the terms of Section 406-B(6) or Section 408-B(5), as appropriate.

E. The Township shall keep a written record of all actions on all requests for modifications.

Section 902. Records

A. The Township shall assign a subdivision application number to all subdivision and land development applications, and all matters referring to an application should be filed in accordance with the applicant name and subdivision case number. The Township shall keep a record of its findings, decisions, and recommendations relative to all plans filed with it for review.

B. All such records shall be public records.

Section 903. Fees and Costs

A. No application for preliminary or final approval shall be deemed to have been submitted until the fee and escrow deposit, set forth below, shall have been paid.

B. A subdivision or land development application fee (non-refundable) and an escrow deposit shall be submitted with any application for preliminary or final plan approval to cover the costs of plan review and processing. Amounts of the application fee and escrow deposit shall be fixed by the Board of Supervisors by resolution. The escrowed funds shall be used to reimburse the Township for actual expenditures incident to these processes, including but not limited to fees of the municipal engineer and other reviews authorized under the MPC. Any costs incurred by the Township in excess of the amount held in escrow shall be fully reimbursed by the applicant prior to the issuance of any permits. Any unexpended balance in the escrow deposit shall become part of the second deposit required in Section 903-C, below.

C. As a condition of final plan approval and recording and following the establishment of any required performance guarantee, a second escrow deposit shall be established to cover the cost of: (i) inspections of improvements construction; (ii) materials or site testing; or (iii) maintenance costs (e.g., snow removal), prior to the acceptance of improvements by the Township. Any costs incurred by the Township in excess of the amount held in escrow shall be fully reimbursed by the applicant. Any unexpended balance in the escrow deposit following acceptance of dedication of improvements by the Township shall be returned to the applicant. The amount of the escrow deposit shall be fixed by resolution of the Board of Supervisors.

Section 904. Enforcement

A. In addition to other remedies, the Board of Supervisors may institute and maintain appropriate actions by law or in equity to restrain, correct, or abate violations, to prevent unlawful construction, to recover damages, and to prevent illegal occupancy of a building, structure, or premises.

B. The Township may refuse to issue any permit or grant any approval necessary to further improve or develop any real property which has been developed or which has resulted from subdivision of real property in violation of this Ordinance. This authority to deny such a permit or approval shall apply to any of the following applicants:

1. The owner of record at the time of such violation.
2. The vendee or lessee of the owner of record at the time of such violation without regard as to whether such vendee or lessee had actual or constructive knowledge of the violation.
3. The current owner of record who acquired the property subsequent to the time of violation without regard as to whether such current owner had actual or constructive knowledge of the violation.
4. The vendee or lessee of the current owner of record who acquired the property subsequent to the time of violation without regard as to whether such vendee or lessee had actual or constructive knowledge of the violation.

C. As an additional condition for issuance of a permit or the granting of an approval to any such owner, current owner, vendee, or lessee for the development of any such real property, the Township may require compliance with the conditions that would have been applicable to the property at the time the applicant acquired an interest in such real property.

Section 905. Penalties

Any person, partnership, or corporation who or which has violated the provisions of this Ordinance shall, upon being found liable therefore in a civil enforcement proceeding commenced by the Township, pay a judgment of not more than $500.00 plus all court costs, including reasonable attorney fees incurred by the Township as a result therefore. No judgment shall commence or be imposed, levied, or be payable until the date of the determination of a violation by the district justice. If the defendant neither pays nor timely appeals the judgment the Township may enforce the judgment pursuant to the applicable rules of civil procedure. Each

day that a violation continues shall constitute a separate violation, unless the district justice determining that there has been a violation further determines that there was a good faith basis for the person, partnership, or corporation violating the Ordinance to have believed that there was no violation, in which event there shall be deemed to have been only one such violation until the fifth day following the date of the determination of a violation by the district justice and thereafter each day that a violation continues shall constitute a separate violation.

Section 906. Appeals

Appeals from the actions of the Board with respect to any application for subdivision or land development approval shall be governed by the provisions of the Municipalities Planning Code as they may be amended form time to time, or any successor legislation thereto.

Section 907. Revision and Amendment

A. The Board of Supervisors may, from time to time, review, modify, or amend the terms of this Ordinance. Except for an amendment proposed by the Township Planning Commission, the Board shall submit any proposed amendment to the municipal Planning Commission for review and recommendation. At least 30 days prior to the hearing on the proposed amendment, the Board shall submit any proposed amendment to the Chester County Planning Commission for review and recommendation. The Board shall take no action to approve or deny any proposed amendment until it has received a report on the proposed amendment from the County Planning Commission, or until 30 days have been allowed for the receipt of such a report.

B. Notice of the date, time, and place of the public hearing on the proposed amendment, and the content of such notice, shall be in accordance with Section 506 of the Municipalities Planning Code.

C. In the event substantial amendments are made in the proposed ordinance or amendment, before voting on enactment, the Board, at least 10 days prior to enactment, shall readvertise a brief summary setting forth all the provisions in reasonable detail together with a summary of the amendments.

D. Within 30 days following adoption, the Township shall forward a certified copy of any amendment to this Ordinance to the appropriate agencies required by ordinance or statute.